DEPARTMENT OF THE ARMY TECHNICAL MANUAL

DEPARTMENT OF THE AIR FORCE TECHNICAL ORDER

TM 11-356

TO 16-30FGC1-5

RADIOTELETYPE TERMINAL EQUIPMENT AN/FGC-1 AN/FGC-1C AND AN/FGC-1X

DEPARTMENTS OF THE ARMY AND THE AIR FORCE

AUGUST 1952

TM 11–356/TO 16–30FGC–1–5

This manual supersedes TM 11–356, 5 November 1943, and TB 11–356–1, 23

RADIOTELETYPE TERMINAL EQUIPMENT AN/FGC-1 AN/FGC-1C AND AN/FGC-1X

United States Government Printing Office

Washington : 1952

DEPARTMENTS OF THE ARMY AND
THE AIR FORCE
WASHINGTON 25, D. C., *26 August 1952*

TM 11–356/TO 16–30FGC1–5 is published for the information and guidance of all concerned.

[AG 413.44 (5 Aug 52)]

BY ORDER OF THE SECRETARIES OF THE ARMY AND THE AIR FORCE:

OFFICIAL:
WM. E. BERGIN
Major General, USA
The Adjutant General

J. LAWTON COLLINS
Chief of Staff, United States Army

OFFICIAL:
K. E. THIEBAUD
Colonel, USAF
Air Adjutant General

HOYT S. VANDENBERG
Chief of Staff, United States Air Force

DISTRIBUTION:

Active Army:

Tech Svc (1); Tech Svc Bd (1); AFF Bd (ea Svc Test Sec) (1); AFF (5); AA Comd (2); OS Maj Comd (5); Base Comd (5); Log Comd (5); A (20); MDW (5); CHQ (2); FT (2); Sch (5) except 11 (25); Gen Dep (2); Dep 11 (20) except Sig Sec, Gen Dep (10); Tng Div (2); POE (10), OSD (2); Lab 11 (5); Mil Dist (3); 4th & 5th Ech Maint Shops 11 (3); Two (2) copies to each of the following T/O & E's: 11–107; 11–127A; 11–128; 11–500 CA, CB, CC, CD; 11–587; 11–592; 11–597.

NG: Same as Active Army except one copy to each unit.

ORC: Same as Active Army except one copy to each unit.

For explanation of distribution formula, see SR 310–90–1.

CONTENTS

	Paragraphs	Page
CHAPTER 1. INTRODUCTION		
Section I. General	1, 2	1
II. Description and data	3–23	1
CHAPTER 2. OPERATING INSTRUCTIONS		
Section I. Service upon receipt of Radioteletype Terminal Equipment AN/FGC–1(*)	24–36	20
II. Initial adjustment of Radioteletype Terminal Equipment AN/FGC–1(*)	37–49	24
III. Controls and instruments	50–55	30
IV. Operation under usual conditions	56–59	31
V. Operation under unusual conditions	60–63	32
CHAPTER 3. ORGANIZATIONAL MAINTENANCE INSTRUCTIONS		
Section I. Preventive maintenance services	64–68	34
II. Weatherproofing	69, 70	36
III. Trouble shooting at organizational maintenance level	71–75	36
CHAPTER 4. THEORY	76–96	41
CHAPTER 5. FIELD MAINTENANCE INSTRUCTIONS		
Section I. Prerepair procedures	97–103	67
II. Trouble shooting and repair at field maintenance level	104–114	68
III. Final testing	115–118	81
CHAPTER 6. SHIPMENT AND LIMITED STORAGE AND DEMOLITION TO PREVENT ENEMY USE		
Section I. Shipment and limited storage	119, 120	85
II. Demolition to prevent enemy use	121, 122	86
APPENDIX I. REFERENCES	-------	87
II. IDENTIFICATION TABLE OF PARTS	-------	88
INDEX	-------	115

WARNING

Heavy currents at moderate potentials are carried in the wiring of this equipment. These currents are dangerous to life.

All operating adjustments of this equipment are made with the power on. Be careful when examining the wiring of the equipment.

When repairing or replacing parts on a particular circuit, remove the power cord to avoid possible electrocution.

First Aid for Electric Shock

RESCUE.

In case of electric shock, shut off the high voltage at once and ground the circuits. If the high voltage cannot be turned off without delay, free the victim from contact with the live conductor as promptly as possible. Avoid direct contact with either the live conductor or the victim's body. Use a dry board, dry clothing, or other nonconductor to free the victim. An ax may be used to cut the high-voltage wire. Use extreme caution to avoid the resulting electric flash.

SYMPTOMS.

a. Breathing stops abruptly in electric shock if the current passes through the breathing center at the base of the brain. If the shock has not been too severe, the breath center recovers after a while and normal breathing is resumed, provided that a sufficient supply of air has been furnished meanwhile by artificial respiration.

b. The victim is usually very white or blue. The pulse is very weak or entirely absent and unconsciousness is complete. Burns are usually present. The victim's body may become rigid or stiff in a very few minutes. This condition is due to the action of electricity and is not to be considered rigor mortis. Artificial respiration must still be given, as several such cases are reported to have recovered. The ordinary and general tests for death should never be accepted.

TREATMENT.

a. Start artificial respiration immediately. At the same time send for a medical officer, if assistance is available. Do not leave the victim unattended. Perform artificial respiration at the scene of the accident, unless the victim's or operator's life is endangered from such action. *In this case only,* remove the victim to another location, but no farther than is necessary for safety. If the new location is more than a few feet away, artificial respiration should be given while the victim is being moved. If the method of transportation prohibits the use of the Shaeffer prone pressure method, other methods of resuscitation may be used. Pressure may be exerted on the front of the victim's diaphragm, or the direct mouth-to-mouth method may be used. Artificial respiration, once started, must be continued, without loss of rhythm.

b. Lay the victim in a prone position, one arm extended directly overhead, and the other arm bent at the elbow so that the back of the hand supports the head. The face should be turned away from the bent elbow so that the nose and mouth are free for breathing.

c. Open the victim's mouth and remove any foreign bodies, such as false teeth, chewing gum, or tobacco. The mouth should remain open, with the tongue extended. Do not permit the victim to draw his tongue back into his mouth or throat.

d. If an assistant is available during resuscitation, he should loosen any tight clothing to permit free circulation of blood and to prevent restriction of breathing. He should see that the victim is kept warm, by applying blankets or other covering, or by applying hot rocks or bricks wrapped in cloth or paper to prevent injury to the victim. The assistant should also be ever watchful to see that the victim does not swallow his tongue. He should continually wipe from the victim's mouth any frothy mucus or saliva that may collect and interfere with respiration.

e. The resuscitating operator should straddle the victim's thighs, or one leg, in such manner that:

(*1*) the operator's arms and thighs will be vertical while applying pressure on the small of the victim's back;

(*2*) the operator's fingers are in a natural position on the victim's back with the little finger lying on the last rib;

(*3*) the heels of the hands rest on either side of the spine as far apart as convenient without allowing the hands to slip off the victim;

(*4*) the operator's elbows are straight and locked.

f. The resuscitation procedure is as follows:

(*1*) Exert downward pressure, not exceeding 60 pounds, for 1 second.

(*2*) Swing back, suddenly releasing pressure, and sit up on the heels.

(*3*) After 2 seconds rest, swing forward again, positioning the hands exactly as before, and apply pressure for another second.

g. The forward swing, positioning of the hands, and the downward pressure should be accomplished in one continuous motion, which requires 1 second. The release and backward swing require 1 second. The addition of the 2-second rest makes a total of 4

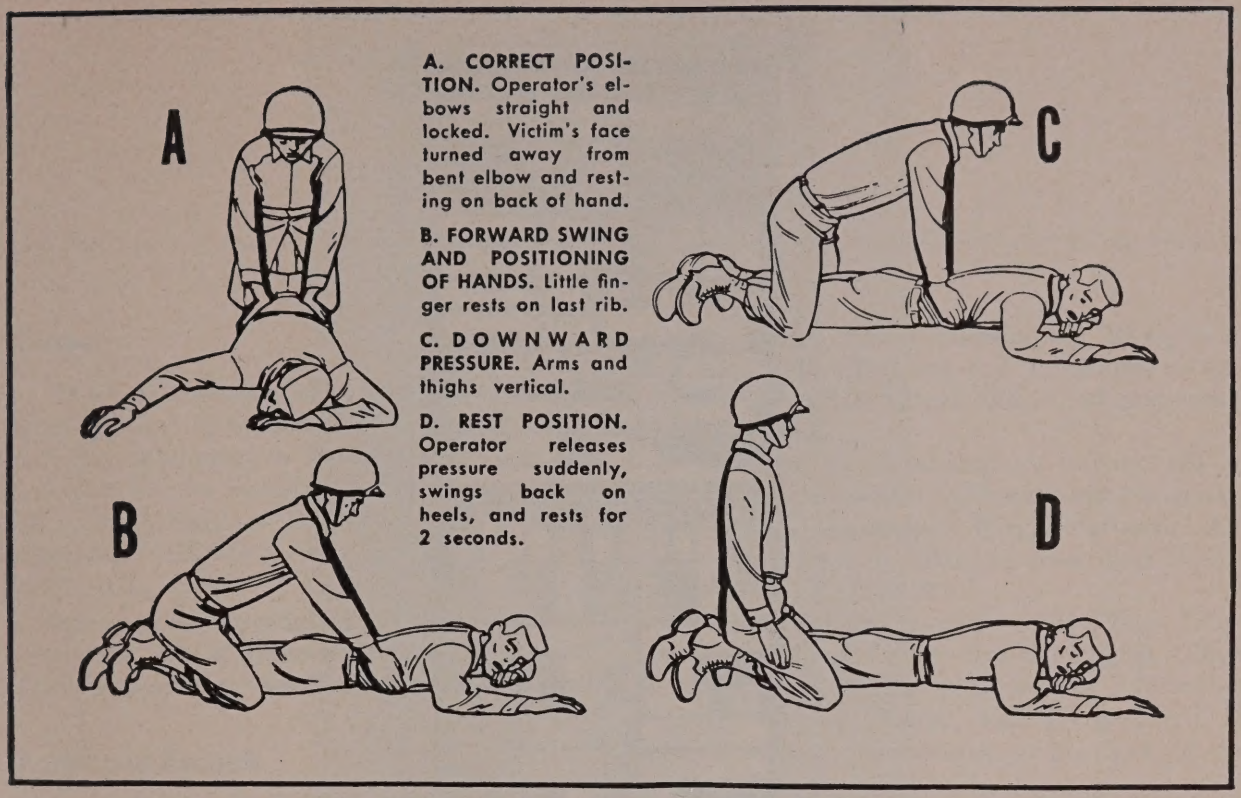

A. CORRECT POSITION. Operator's elbows straight and locked. Victim's face turned away from bent elbow and resting on back of hand.

B. FORWARD SWING AND POSITIONING OF HANDS. Little finger rests on last rib.

C. DOWNWARD PRESSURE. Arms and thighs vertical.

D. REST POSITION. Operator releases pressure suddenly, swings back on heels, and rests for 2 seconds.

seconds for a complete cycle. Until the operator is thoroughly familiar with the correct cadence of the cycle, he should count the seconds aloud, speaking distinctly and counting evenly in thousands. Example: one thousand and one, one thousand and two, etc.

h. Artificial respiration should be continued until the victim regains normal breathing or is pronounced dead by a medical officer. Since it may be necessary to continue resuscitation for several hours, relief operators should be used if available.

RELIEVING OPERATOR.

The relief operator kneels beside the operator and follows him through several complete cycles. When the relief operator is sure he has the correct rhythm, he places his hands on the operator's hands without applying pressure. This indicates that he is ready to take over. On the backward swing, the operator moves and the relief operator takes his position. The relieved operator follows through several complete cycles to be sure that the new operator has the correct rhythm. He remains alert to take over instantly if the new operator falters or hesitates on the cycle.

STIMULANTS.

a. If an inhalant stimulant is used, such as aromatic spirits of ammonia, the individual administering the stimulant should first test it himself to see how close he can hold the inhalant to his own nostril for comfortable breathing. Be sure that the inhalant is not held any closer to the victim's nostrils, and then for only 1 or 2 seconds every minute.

b. After the victim has regained consciousness, he may be given hot coffee, hot tea, or a glass of water containing ½ teaspoon of aromatic spirits of ammonia. *Do not give any liquids to an unconscious victim.*

CAUTIONS.

a. After the victim revives, keep him LYING QUIETLY. Any injury a person may have received may cause a condition of shock. Shock is present if the victim is pale and has a cold sweat, his pulse is weak and rapid, and his breathing is short and gasping.

b. keep the victim lying flat on his back, with his head lower than the rest of his body and his hips elevated. Be sure that there is no tight clothing to restrict the free circulation of blood or hinder natural breathing. Keep him warm and quiet.

c. A resuscitated victim must be watched carefully as he may suddenly stop breathing. *Never leave a resuscitated person alone until it is CERTAIN that he is fully conscious and breathing normally.*

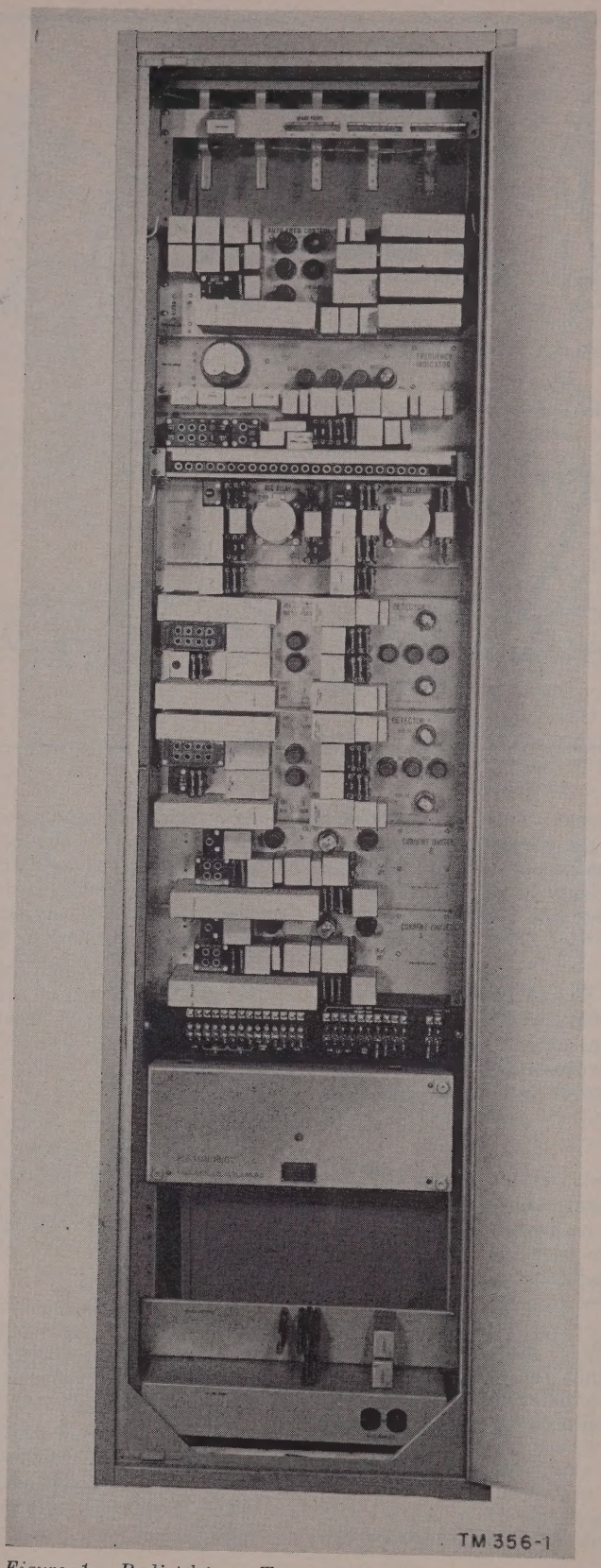

Figure 1. Radioteletype Terminal Equipment AN/FGC-1(*), front view.

CHAPTER 1
INTRODUCTION

Section I. GENERAL

1. Scope

a. These instructions are published for the information and guidance of the personnel to whom this equipment is issued. They contain information for the installation, operation, maintenance, and repair of Radioteletype Terminal Equipments AN/FGC–1, AN/FGC–1C, and AN/FGC–1X.

b. There are two appendixes. The first appendix covers a list of references, and the second appendix contains an identification table of parts.

2. Forms and Records

The following forms will be used for reporting unsatisfactory conditions of Army equipment and in performing preventive maintenance:

a. DD Form 6, Report of Damaged or Improper Shipment, will be filled out and forwarded as prescribed in SR 745–45–5 (Army) and ARF 71–4 (Air Force).

b. DA Form 468, Unsatisfactory Equipment Report, will be filled out and forwarded to the Office of the Chief Signal Officer, as prescribed in SR 700–45–5.

c. AF Form 54, Unsatisfactory Report, will be filled out and forwarded to Commanding General, Air Matériel Command, Wright-Patterson Air Force Base, Dayton, Ohio, as prescribed in SR 700–45–5 and AFR 65–26.

d. DA AGO Form 11-238, Operator First Echelon Maintenance Check List for Signal Corps Equipment—Radio Communication, Direction Finding, Carrier, Radar, will be prepared in accordance with instructions on the back of the form.

e. DA AGO Form 11–239, Second and Third Echelon Maintenance Check List for Signal Corps Equipment—Radio Communication, Direction Finding, Carrier, Radar, will be prepared in accordance with instructions on the back of the form.

f. Use other forms and records as authorized.

Section II. DESCRIPTION AND DATA

3. Purpose and Use

Note. Basic nomenclature followed by (*) is used to indicate all models of the item of equipment included in this technical manual; for example, Radioteletype Terminal Equipment AN/FGC–1(*) represents Radioteletype Terminal Equipments AN/FGC–1, AN/FGC–1C, and AN/FGC–1X. Where only one model is discussed, specific nomenclature (without (*)) will be used. Basic nomenclature followed by ( ) with no number or symbol in the parentheses is used to indicate all models of the particular equipment mentioned, regardless of their procurement.

a. Purpose. Radioteletype Terminal Equipment AN/FGC–1(*) (fig. 1) forms a part of the receiving portion of a radioteletype system. Its purpose is to convert the output of the associated radio receivers from v-f (voice-frequency) signals to d-c (direct-current) teletypewriter pulses.

b. Use. The AN/FGC–1(*) is used for single channel operation at the *receiving* end of a radioteletype system which uses space diversity reception and frequency shift transmission. The radio transmitter radiates two unmodulated carrier frequencies spaced 850 cps (cycles per second) apart to represent teletypewriter space and mark signals. Two radio receivers arranged for space diversity reception receive the signals and convert them to 2,125 cps for mark signals and 2,975 cps for space signals. The AN/GFC–1(*) converts the 2,125 cps and the 2,975 cps to d-c teletypewriter pulses which are applied through land lines to teletypewriter receiving equipment.

4. System Application

a. General.

(1) Radioteletype Terminal AN/FGC–1(*) is part of the receiving portion of a single channel, long range, radioteletype com-

munications system. The AN/FGC–1(*) accepts the v-f frequency-shift output of the associated radio receiver or receivers (*b* below) and converts the frequency-shift signals to d-c printer pulses.

(2) Radioteletype Terminal Equipment AN/FGC–1(*) may be used in conjunction with either high frequency (2 mc (megacycle) to 30 mc) or low-frequency (70 kc (kilocycle) to 500 kc) radio systems. The use of the AN/FGC–1(*) with high frequency systems is discussed in *b*(1) and (2) below. The use of the AN/FGC–1(*) with low frequency systems is discussed in *b*(3) and (4) below. The loop may be arranged for either neutral or polar operation. Loop arrangements are discussed in *c* below.

b. High Radio-Frequency and Low Radio-Frequency Systems.

(1) When radio frequencies in the 2 mc to 30 mc range (fig. 2) are used in the radio portion of the system, space diversity reception is utilized. The outputs of the two radio receivers are processed in separate channels of the AN/FGC–1(*) and are combined in the receive relay. A frequency shift of 850 cps is used with the high radio frequencies.

(2) Diversity Receiving Equipments AN/FRR–3 and AN/FRR–3A and Radio Receiving Set AN/FRR–12 are high-frequency radio receivers which may be used with the AN/FGC–1(*).

(3) When radio frequencies in the 70-kc to 500-kc range (fig. 3) are used, space diversity reception is not utilized. A

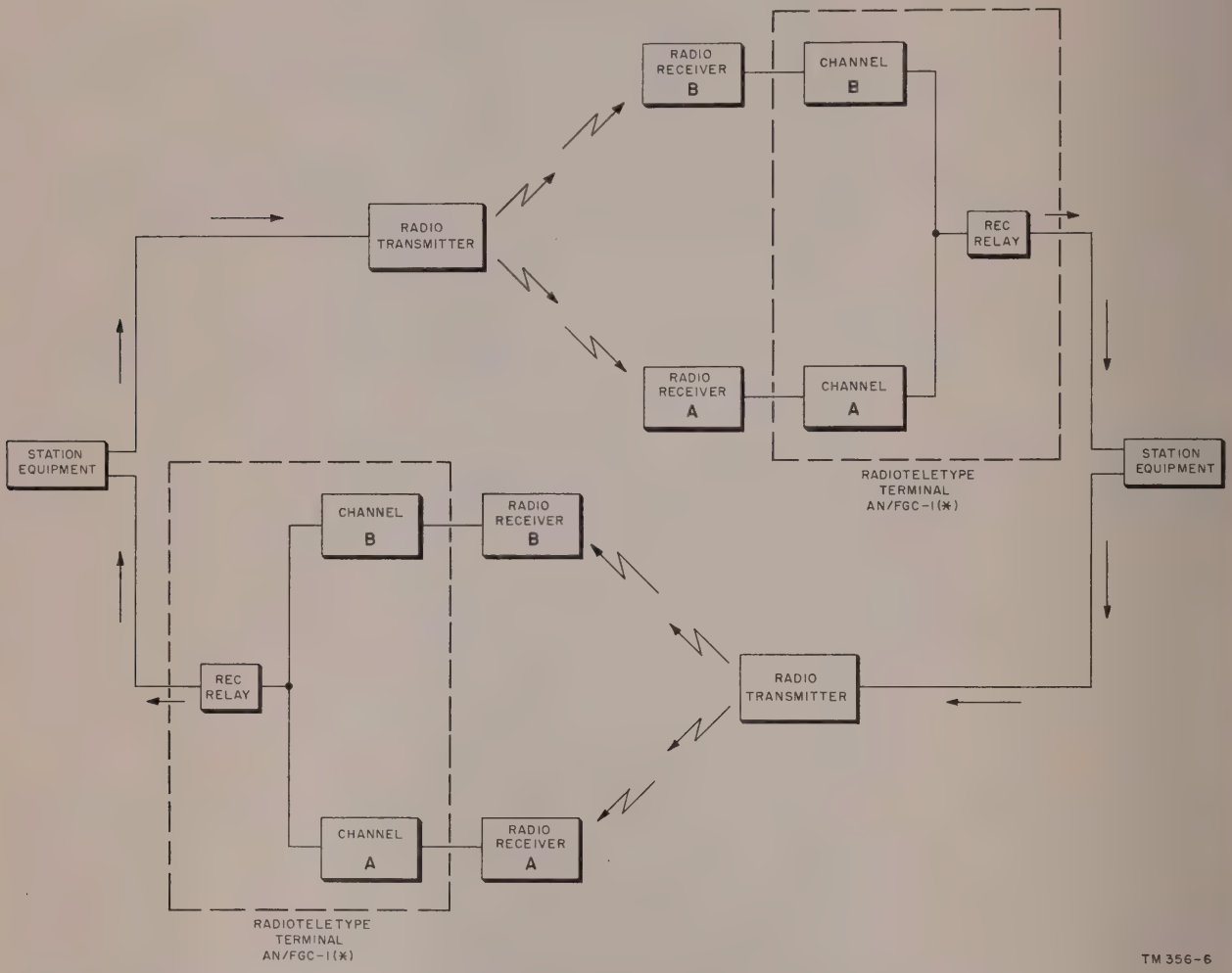

Figure 2. Radioteletype Terminal Equipment AN/FGC–1(*), high-frequency radio, system application.

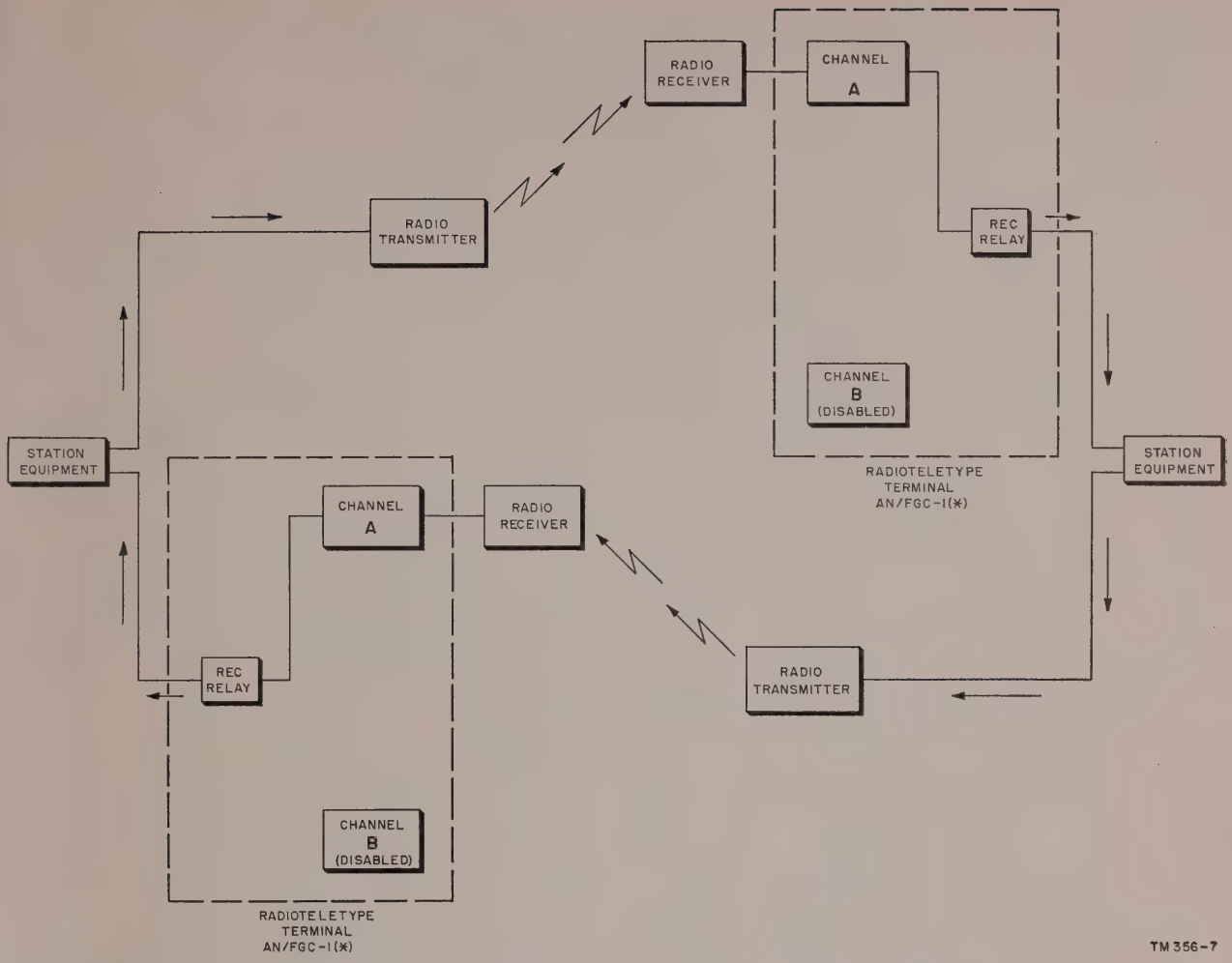

Figure 3. Radioteletype Terminal Equipment AN/FGC–1(*), low-frequency radio, system application.

frequency shift of 170 cps is used to produce mark and space signals (par. 35). The 170-cps frequency shift necessitates replacement of the M CH and S CH filters in one of the detector panels. Since space diversity reception is not used with low frequency radios, only one channel of the AN/FGC–1(*) is utilized. The other (unmodified) channel is disabled.

(4) Radio Receivers BC–779–( ) and BC–344–( ) are low-frequency radio receivers which may be used with the AN/FGC–1(*).

c. Loop Arrangements. The output of the AN/FGC–1(*) may be arranged for either polar or neutral loop operation. Changes to be made in the AN/FGC–1(*) to adapt it for neutral operation are discussed in paragraph 34.

5. Technical Characteristics

Input signal:	
With high-frequency radio:	
Mark	2,125 cps.
Space	2,975 cps.
Frequency shift	850 cps.
Transmission speed	60 wpm.
With low-frequency radio:	
Mark	2,465 cps.
Space	2,635 cps.
Frequency shift	170 cps.
Transmission speed	60 wpm.
Output signal	dc, neutral or polar.
Loop resistance:	
Polar	3,700 ohms max.
Neutral	2,000 ohms max.
Power requirements:	
AN/FGC–1 and AN/FGC–1C	103 to 127 v ac or 207 to 253 v ac, 50/60 cps.
AN/FGC–1X	103 to 127 v ac or 207 to 253 v ac, 25/60 cps.

Number of tubes	31.
Dimensions:	
Height	7 ft.
Width	17 in.
Depth	19⅝ in.
Panel width	19 in.
Weight	425 lb.

6. Packaging Data

a. General. When packaged for export shipment, Radioteletype Terminal Equipment AN/FGC–1(*) is packed in a moisture-vaporproof wooden export crate. Before packaging, all interior components of the equipment are braced and blocked to prevent movement during shipment. The equipment then is placed in a horizontal position upon a wooden mounting base which is fastened by bolts to the base and skids of the crate. The equipment is secured to the mounting base by steel straps. A cushioning shroud of flexible corrugated paper, a water-vaporproof barrier, and a waterproof barrier surround the equipment and the mounting base in the crate. Bags of desiccant and a fiberboard box which contains spare parts and accessories are fastened to the sides of the mounted equipment. When the equipment is packaged for domestic shipment, the barriers and the desiccant are omitted. The packed crate is closed by nailing its top in place. The closed crate then is secured by steel straps. An exploded view of Radioteletype Terminal Equipment AN/FGC–1(*) packaged for export shipment is shown in figure 4.

b. Shipping Weight and Dimensions. When packaged for export shipment, Radioteletype Terminal Equipment AN/FGC–1(*) has the following shipping (gross) weight and dimensions:

Weight	825 pounds.
Length	106 inches.
Width	38 inches.
Height	29 inches.
Volume	67.5 cubic feet.

7. Table of Components

a. The following table lists all the components required for a complete Radioteletype Terminal Equipment AN/FGC–1(*). The first column lists the Army-Navy nomenclature of the components, the second column indicates the manufacturer's designation, and the third column indicates the required number of each component. Sizes and weights of the individual components of the AN/FGC–1(*) are not included in the table since the bay is shipped with all components mounted in the bay.

Army-Navy nomenclature	Manufacturer's designation	Number required
Electrical Equipment Cabinet CY–1071/FGG–1.	Cabinet	1
Power Supply PP–737/FGC–1[a].	Rectifier X–61680B [a]	1
Power Supply PP–763/FGC–1[b].	Rectifier X–61680C [b]	1
Terminal Box J–447/FGC–1.	Utility outlet and heater panel.	1
Telegraph Repeater TH–11/FGC–1.	Receive relay panel	1
Signal Data Converter CV–250/GFC–1.	Frequency indicator panel.	
Current Regulator CN–164/FGC–1.	Current limiter panel	2
Receiver Control C–948/FGC–1.	Automatic frequency control unit.	1
Under Voltage Alarm BZ–27/FGC–1.	Alarm and miscellaneous panel.	1
Trigger Amplifier AM–591/FGC–1.	Detector panel	2
	Disk-type rectifier	1
	Spare fuse panel	1
	Jack strip	1
	Fuse panel	1

[a] Used only in AN/FGC–1 and AN/FGC–1C.
[b] Used only in AN/FGC–1X.

b. The components are not integral units, but are mounted in Electrical Equipment Cabinet CY–1071/FGC–1 with intercomponent wiring permanently connected.

c. Figures 1 and 5 show front and rear views of Radioteletype Terminal Equipment AN/FGC–1(*).

8. Description of Current Regulator CN–164/FGC–1 (Current Limiter Panel)

a. Current Regulator CN–164/FGC–1 is a three-tube limiter-amplifier. It receives v-f frequency-shift signals of varying amplitudes from the radio receiver, and amplifies and limits these signals. The output of a current limiter panel is a frequency-shift signal of constant amplitude.

b. Two Current Regulators CN–164/FGC–1 are required for each AN/FGC–1(*), one for channel A, designated current limiter A, the other for channel B, designated current limiter B. A front view of current limiter A is shown in figure 6. A front view of current limiter B is shown in figure 7. A rear view of a current limiter panel is shown in figure 8.

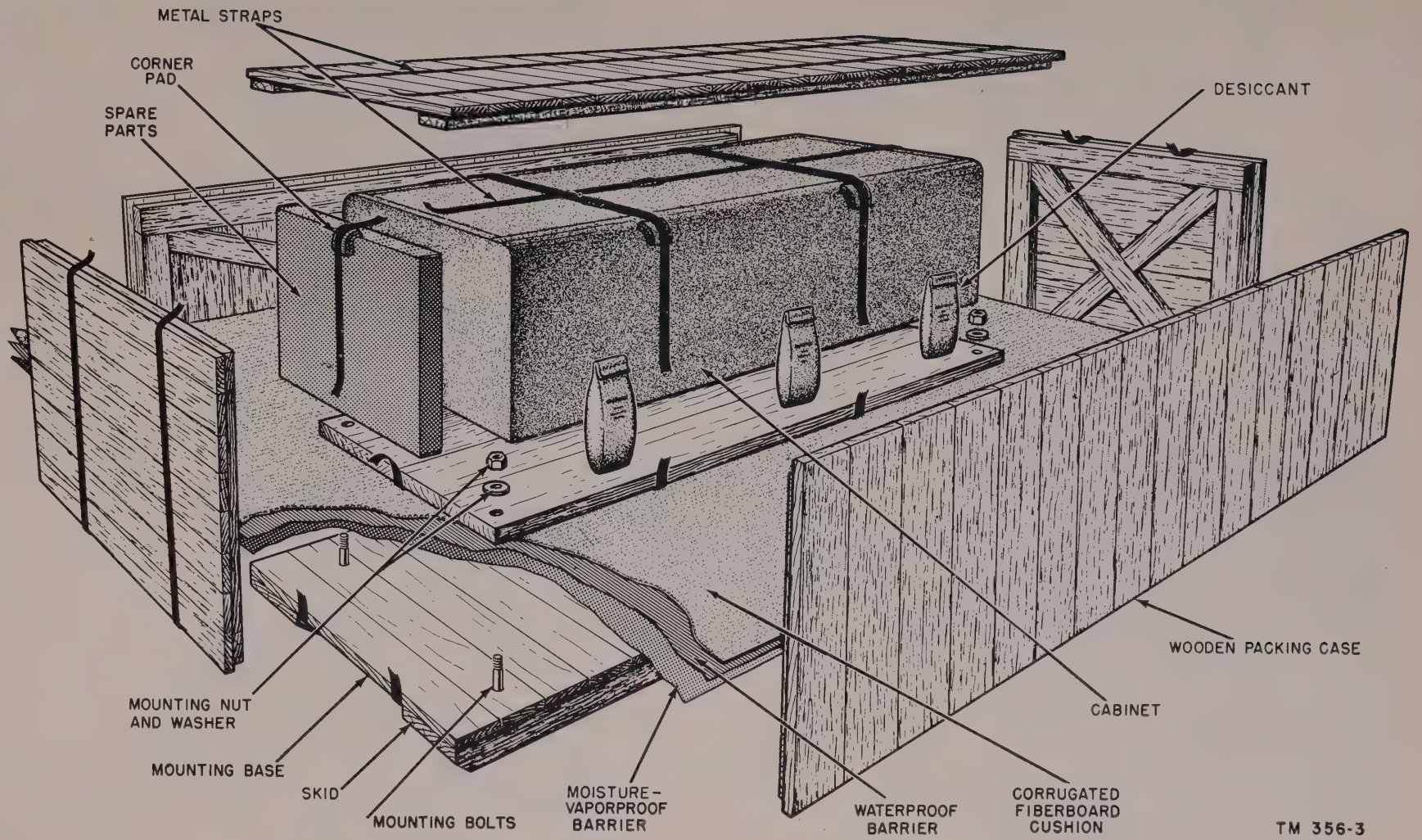

Figure 4. Radioteletype Terminal Equipment AN/FGC–1(*) packaged for export shipment, exploded view.

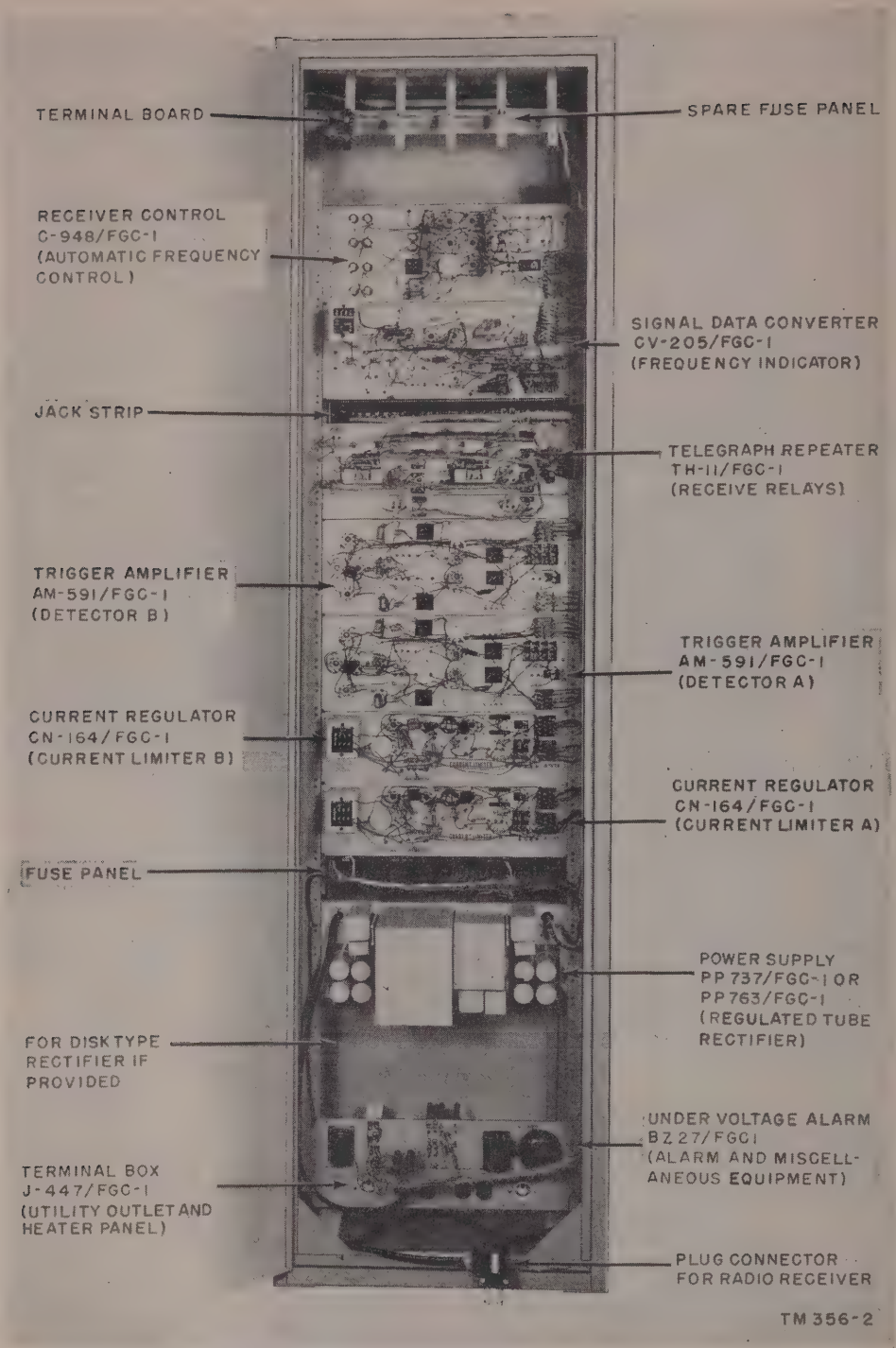

Figure 5. Radioteletype Terminal Equipment AN/FGC–1(*), rear view.

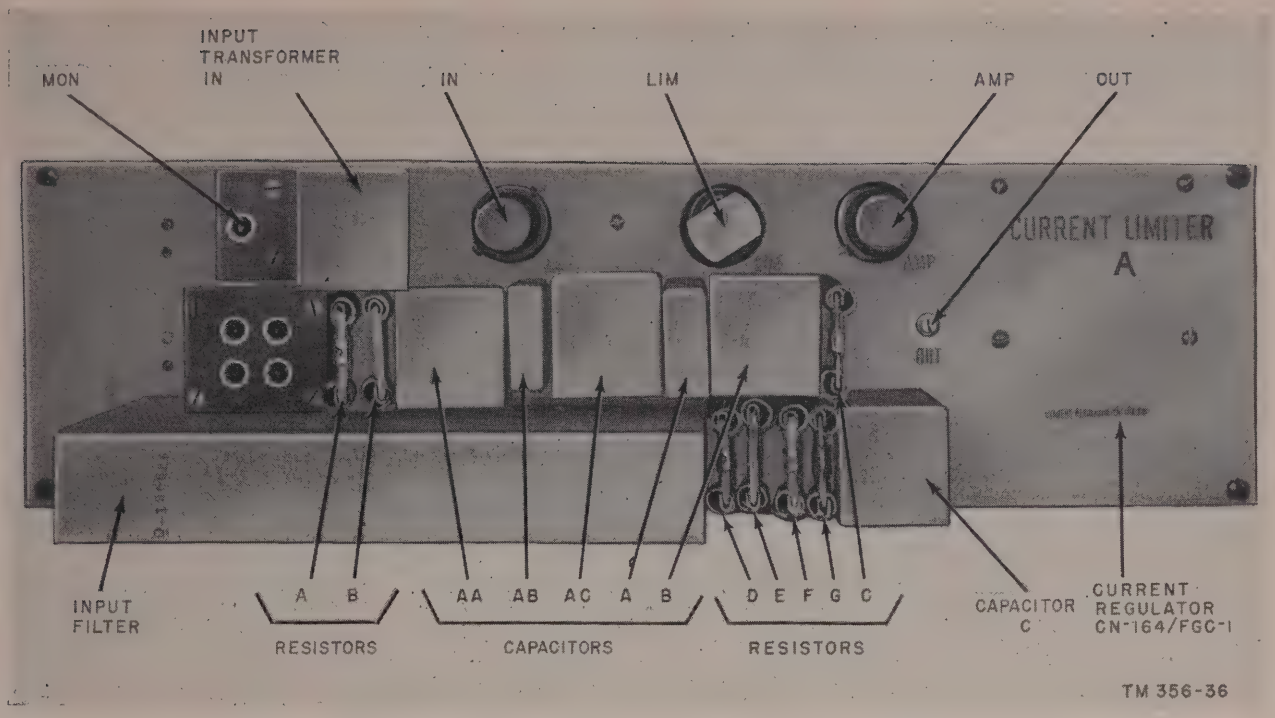

Figure 6. Current Regulator CN–164/FGC–1 (current limiter A panel), front view.

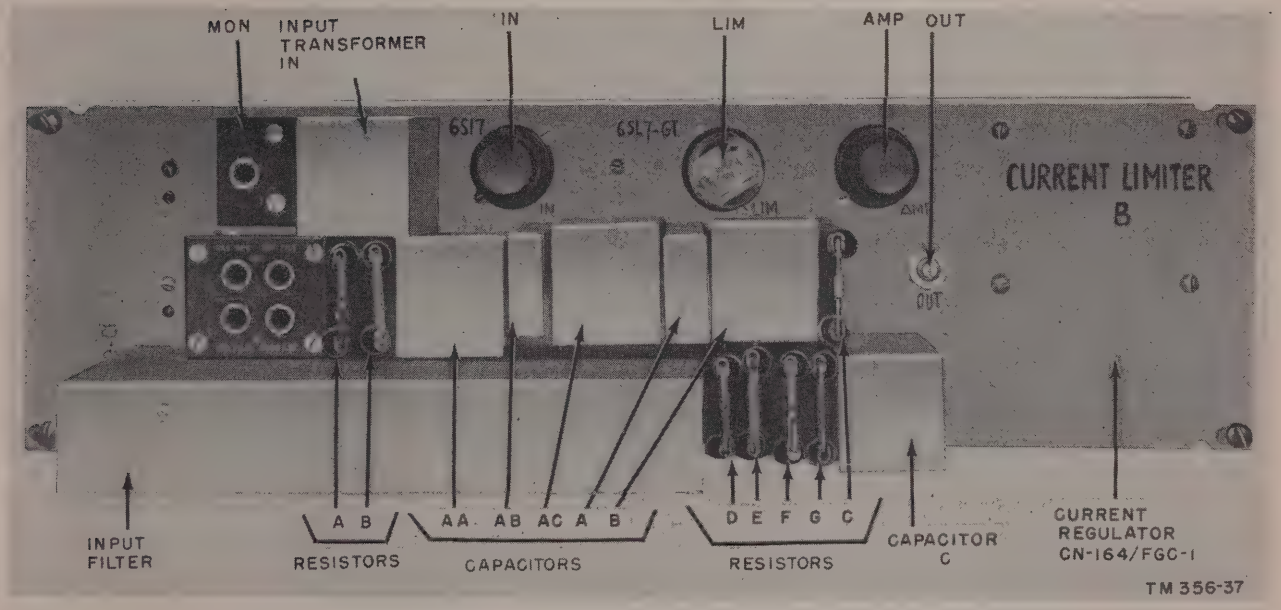

Figure 7. Current Regulator CN–164/FGC–1 (current limiter B panel), front view.

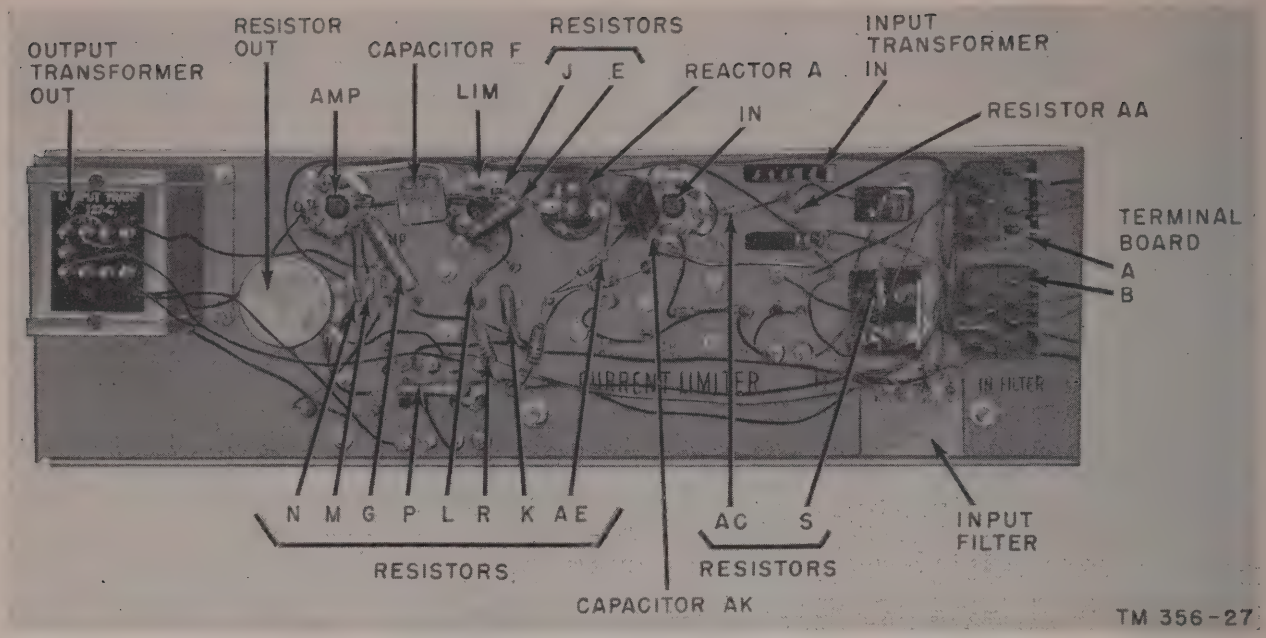

Figure 8. Current Regulator CN–164/FGC–1 (current limiter panel), rear view.

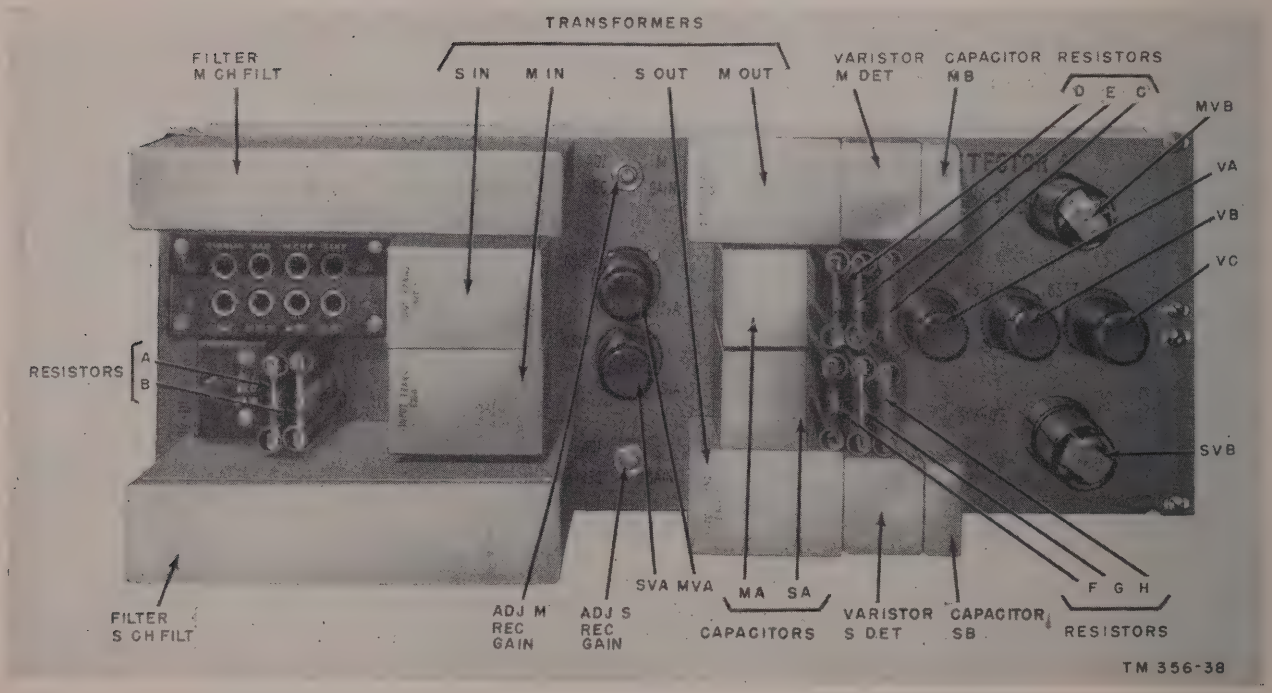

Figure 9. Trigger Amplifier AM–591/FGC–1 (detector A panel), front view.

9. Description of Trigger Amplifier AM–591/FGC–1 (Detector)

a. Trigger Amplifier AM–591/FGC–1 contains a four-tube detector circuit and a three-tube noise suppression circuit.

(1) The detector circuit separates the mark frequency (2,125 cps) received from the associated current limiter panel from the space frequency (2,975 cps), and amplifies and detects these signals in separate space and mark channels.

(2) The noise suppression circuit measures the signal-to-noise ratio in the associated detector circuit. It increases the output of the associated detector if the ratio is favorable with respect to the ratio in the other detector circuit, and decreases the output if the ratio is unfavorable.

b. Two Trigger Amplifiers AM–591/FGC–1 are required for each AN/FGC–1(*), one for channel A, designated detector A, and one for channel B, designated detector B. A front view of detector A is shown in figure 9. A front view of detector B is shown in figure 10. A rear view of a detector panel is shown in figure 11.

10. Description of Telegraph Repeater TH–11/FGC–1 (Receive Relay Panel)

a. Telegraph Repeater TH–11/FGC–1 contains two identical receive relay circuits, designated receive relay circuit 1 and receive relay circuit 2. Receive relay circuit 1 is used in normal operation, but receive relay circuit 2 may be patched into the circuit in place of circuit 1 for test or operational purposes.

b. Each receive relay circuit contains a monitor circuit which functions to maintain the receiving teletypewriter equipment in the mark condition when the radio receiver is in the stand-by condition or during transmission from the local station equipment when a single radio frequency is assigned for both radio transmitters in the system (one way reversible).

c. A front view of Telegraph Repeater TH–11/FGC–1 is shown in figure 12 and a rear view in figure 13.

11. Description of Receiver Control C–948/FGC–1 (Automatic Frequency Control Unit)

a. Receiver Control C–948/FGC–1 is a five-tube circuit which feeds back a d-c voltage to the receiver bay if the mark frequency output of the radio receivers varies from its assigned frequency. The d-c feedback voltage is used to control the frequency of the beat-frequency oscillator in the radio receiver.

b. A front view of the C–948/FGC–1 is shown in figure 14 and a rear view in figure 15.

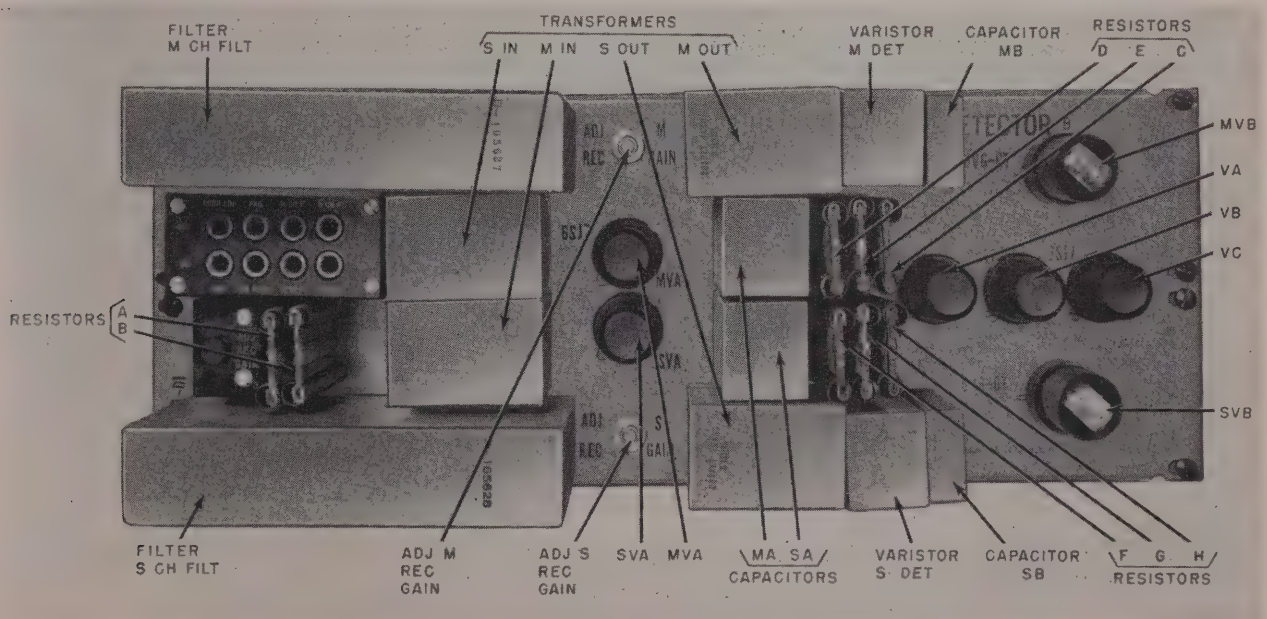

Figure 10. Trigger Amplifier AM–591/FGC–1 (detector B panel), front view.

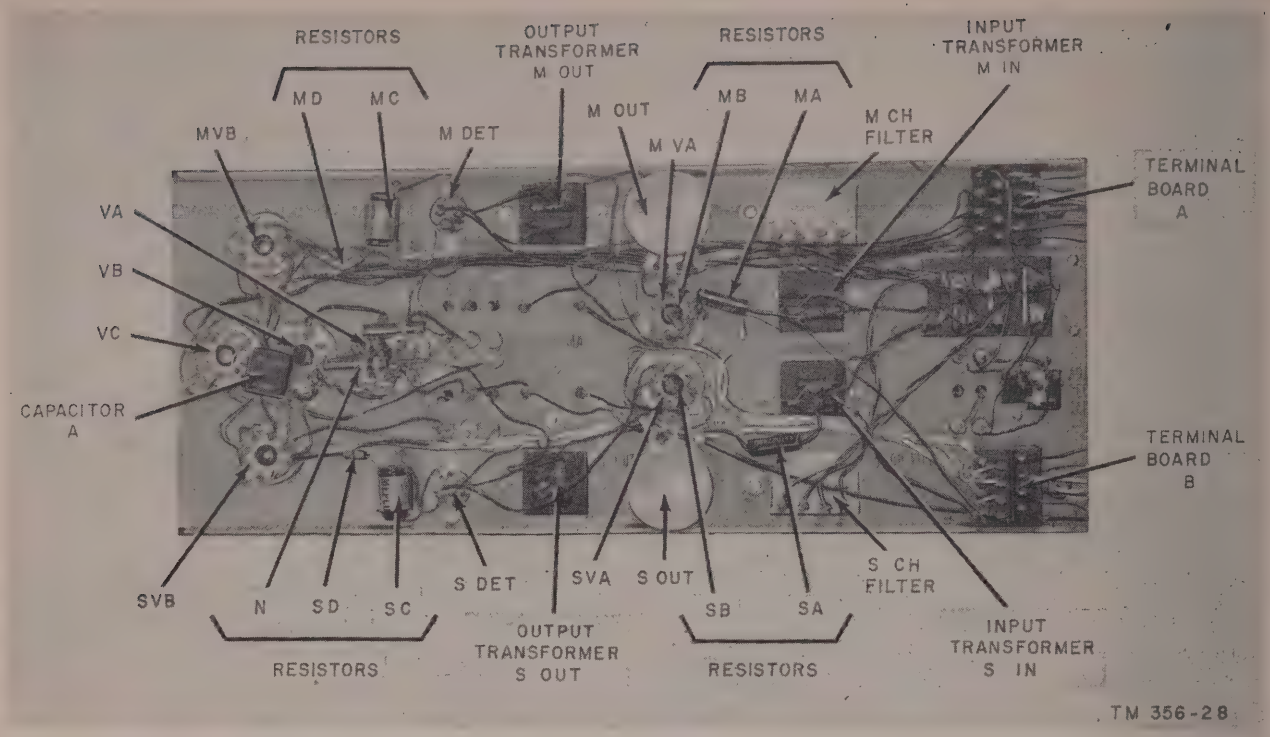

Figure 11. Trigger Amplifier AM–591/FGC–1 (detector panel), rear view.

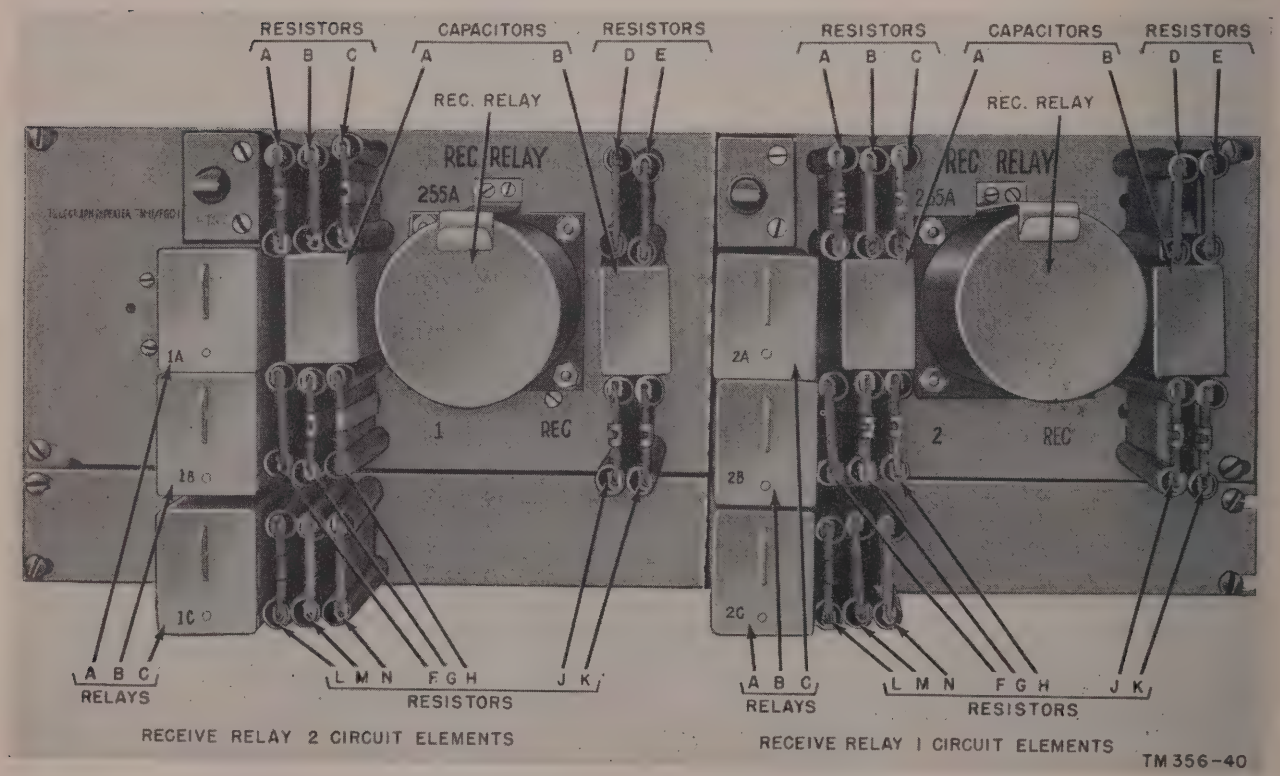

Figure 12. Telegraph Repeater TH–11/FGC–1 (receive relay panel), front view.

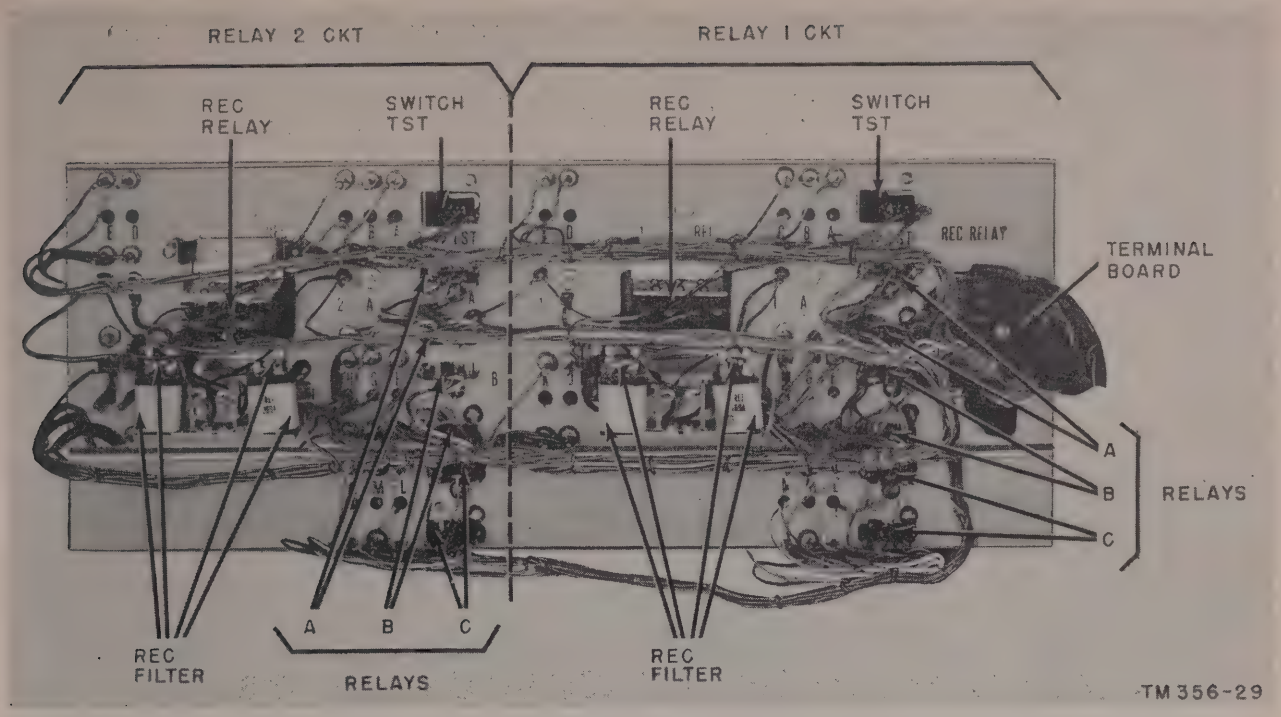

Figure 13. Telegraph Repeater TH–11/FGC–1 (receive relay panel), rear view.

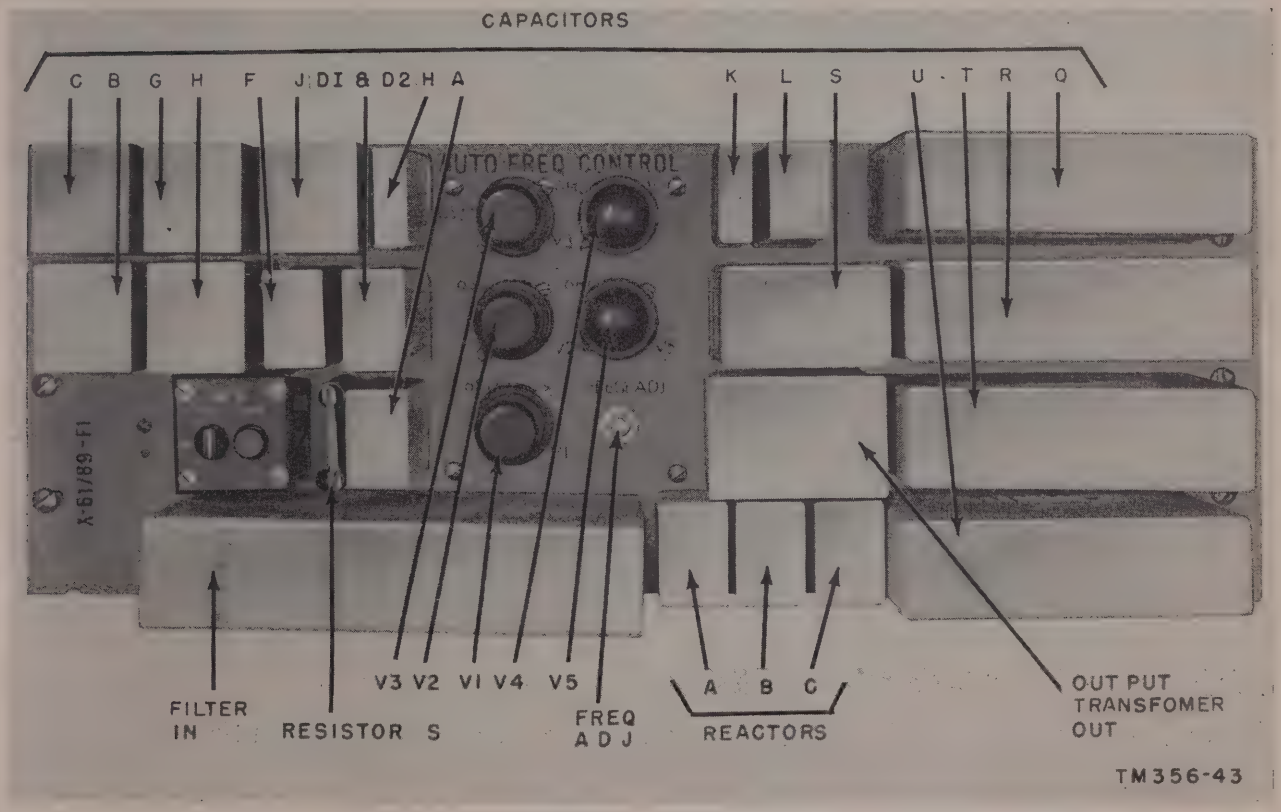

Figure 14. Receiver Control C–948/FGC–1 (automatic frequency control unit), front view.

12. Description of Signal Data Converter CV–205/FGC–1 (Frequency Indicator Panel)

a. Signal Data Converter CV–205/FGC–1 is a four-tube circuit which provides an audible alarm when the radio receiver output frequency varies beyond allowable limits. It contains a meter which may be used to measure alternating currents in the audio range, d-c voltages, signal levels, and frequencies. An oscillator included in the circuit provides a 2,550-cps source used for test purposes.

14. Description of Terminal Box J–447/FGC–1 (Utility Outlet and Heater Panel)

A-c power is applied to the AN/FGC–1(*) through the four-conductor plug associated with Terminal Box J–447/FGC–1. The J–447/FGC–1 contains two outlets marked RECTIFIER to supply a-c power to the power supplies, and four outlets marked APPLIANCE to supply a-c power for electrical appliances. Two heater sockets marked HEAT are provided on the panel. A

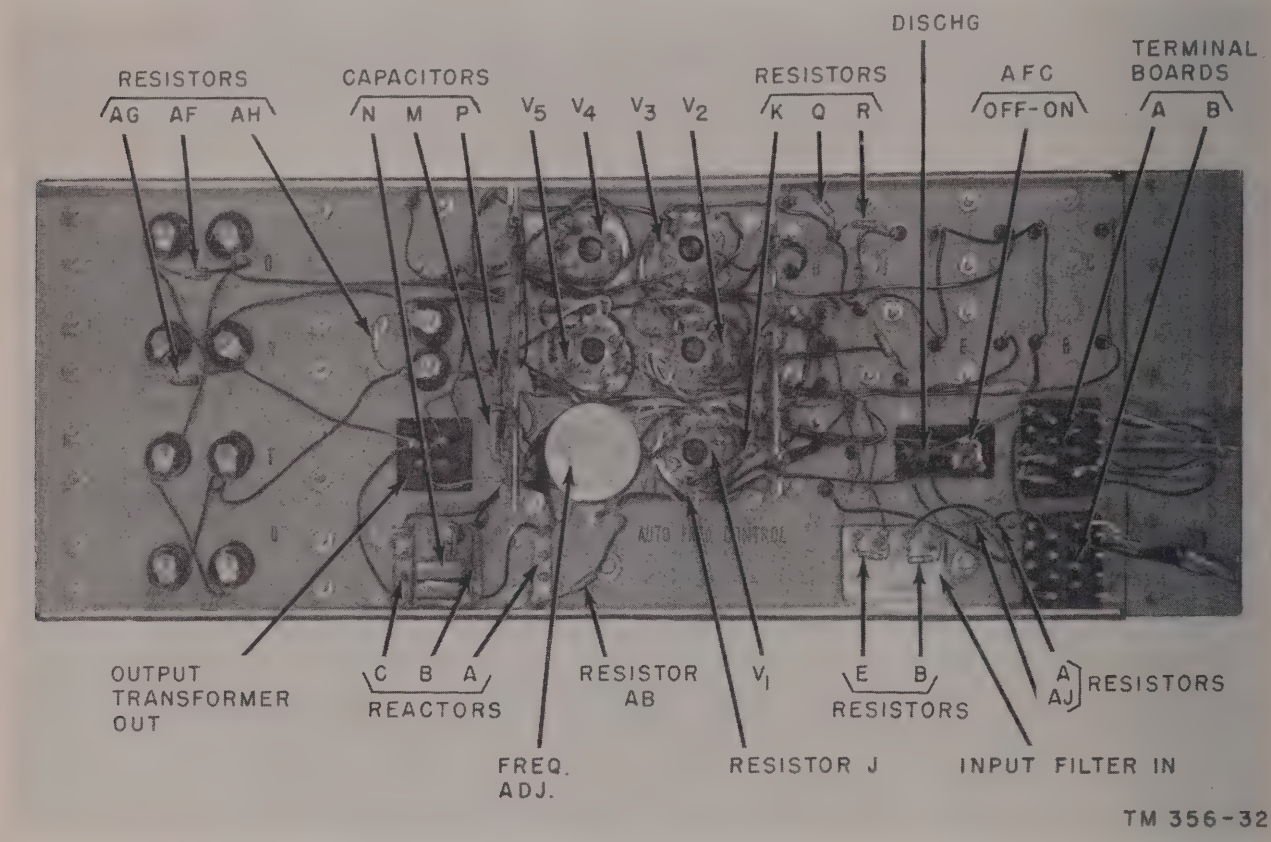

Figure 15. Receiver Control C–948/FGC–1 (automatic frequency control unit), rear view.

b. A front view of the CV–205/FGC–1 is shown in figure 16 and a rear view in figure 17.

13. Description of Under Voltage Alarm BZ–27/FGC–1 (Alarm and Miscellaneous Panel)

A front view of Under Voltage Alarm BZ–27/FGC–1 is shown in figure 18 and rear view in figure 19. The panel serves as a mounting for the fuse alarm (buzzer FA), the frequency alarm bell, relays P and T, and miscellaneous resistors.

front view of the J–447/FGC–1 is shown in figure 18 and a rear view in figure 19.

15. Description of Electrical Equipment Cabinet CY–1071/FGC–1

Electrical Equipment Cabinet CY–1071/FGC–1 serves as a mounting for all the components of the AN/FGC–1(*). The CY–1071/FGC–1 is a metal cabinet 7 feet high, 10¼ inches wide, and 1 foot 5 inches deep. Front and rear views of the cabinet are shown in figures 1 and 5.

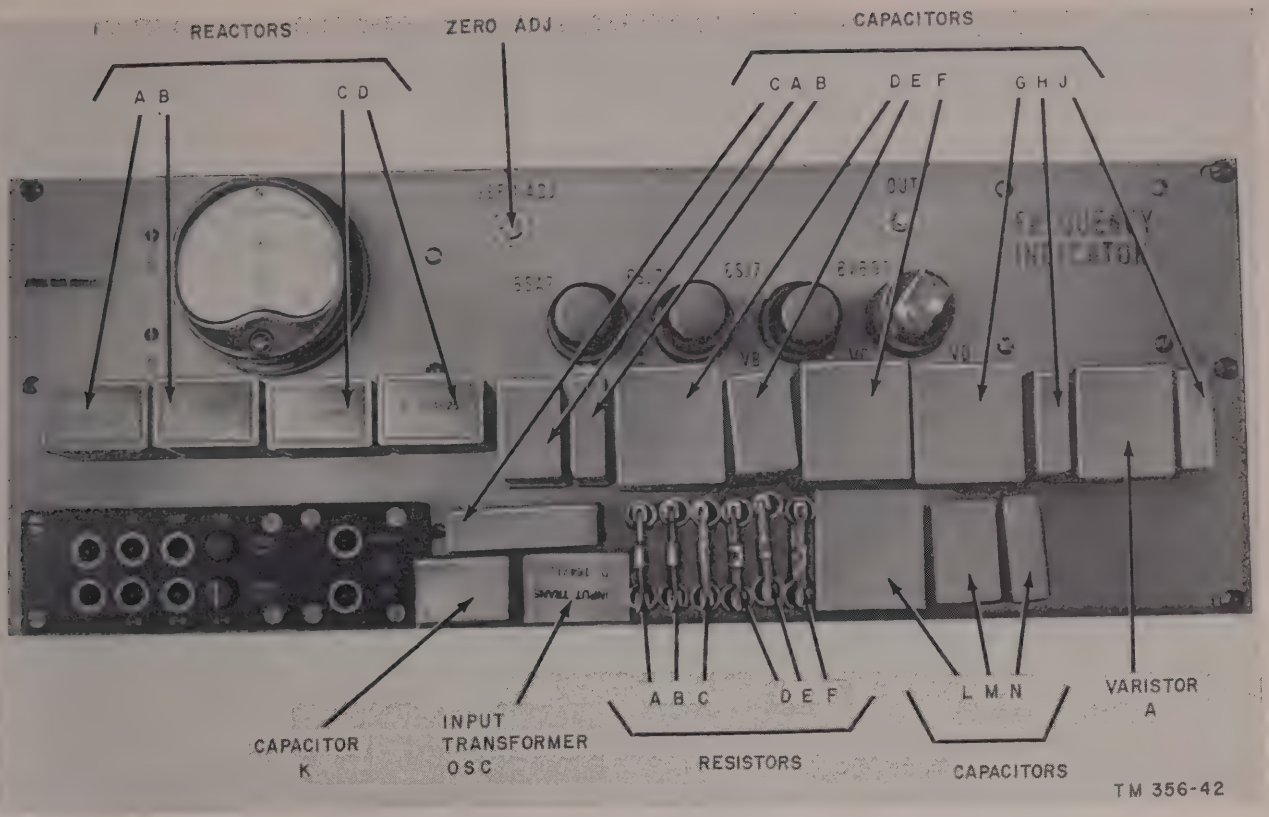

Figure 16. Signal Data Converter CV–205/FGC–1 (frequency indicator panel), front view.

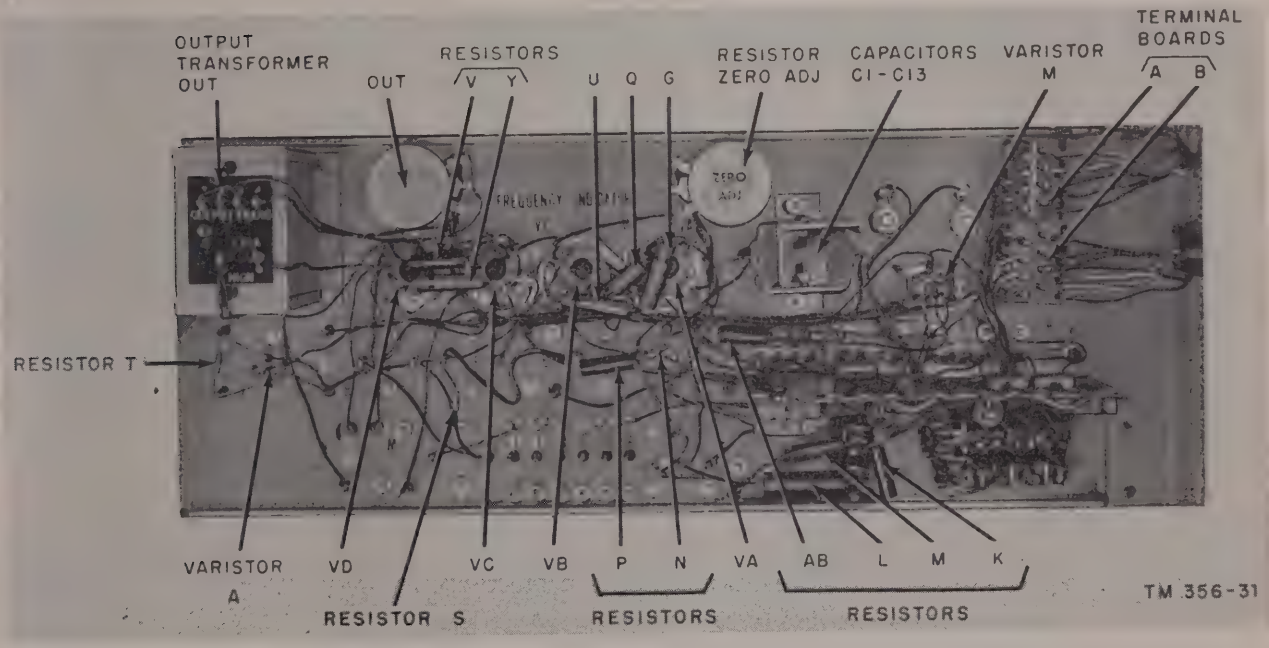

Figure 17. Signal Data Converter CV–205/FGC–1 (frequency indicator panel), rear view.

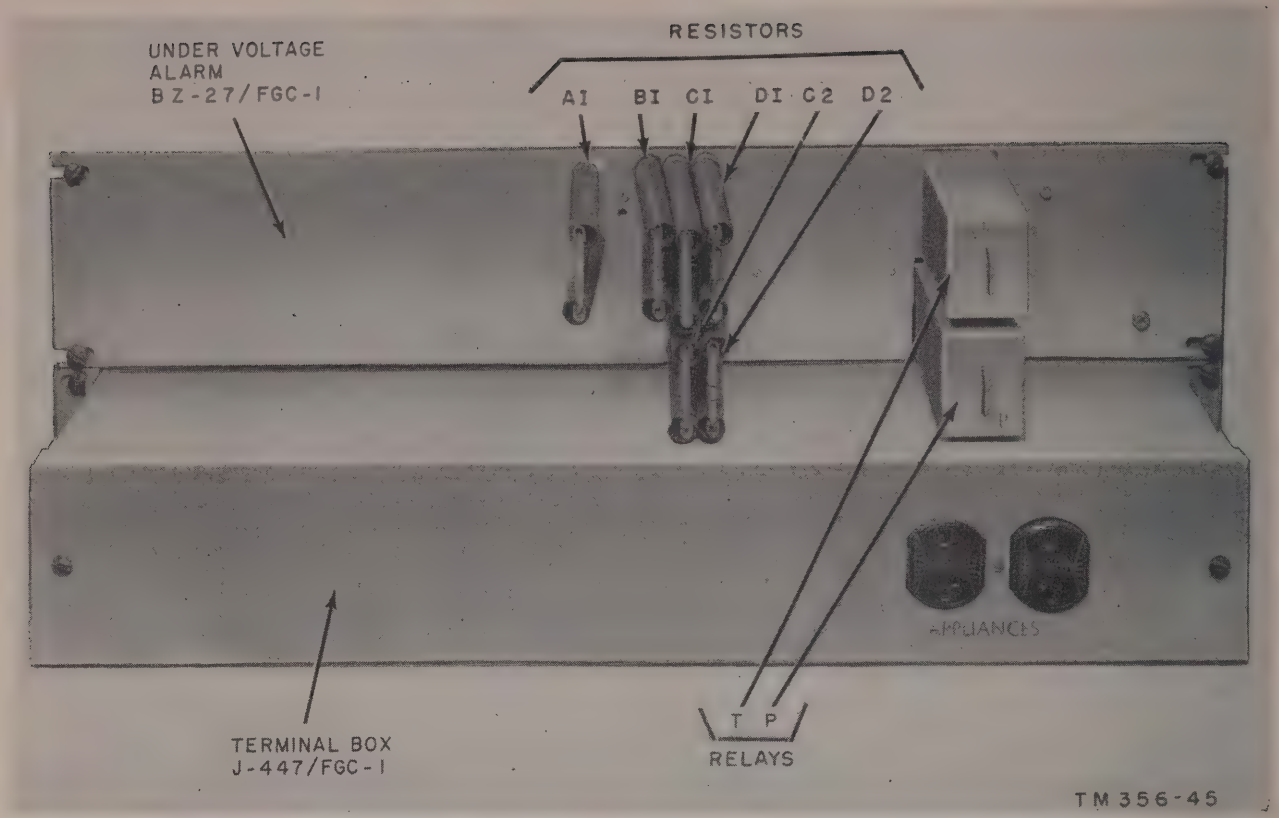

Figure 18. Under Voltage Alarm BZ–27/FGC–1 (alarm and miscellaneous panel) and Terminal Box J–447/FGC–1 (utility outlet and heater panel), front view.

16. Description of Jack Panel

The jack panel is a plastic strip containing 24 jacks used for test purposes and patching. An identification strip above the jacks identifies each jack. Space for two additional jacks is provided at the right end of the jack strip. Jacks are mounted in these spaces when a test board is constructed (par. 112). A front view of the jack panel is shown in figure 20.

17. Description of Fuse Panel

The fuse panel contains 26 grasshopper fuses. The fuses are divided into three groups—telegraph supply, plate supply, and filament supply. Each fuse is identified with its circuit by panel markings. Front and rear views of the fuse panel are shown in figures 21 and 22.

18. Description of Spare Fuse Panel

The spare fuse panel, mounted at the top of the bay, contains holders for spare grasshopper fuses used in the fuse panel and spare cartridge fuses used in the power supply. The bay terminal board is mounted on the rear of the spare fuse panel. A front view of the spare fuse panel is shown in figure 23.

19. Description of Power Supply PP–737/FGC–1 (Rectifier X–61680B)

a. Power Supply PP–737/FGC-1 is used in the AN/FGC–1 and AN/FGC–1C models. It operates from a 50/60-cps, 103- to 127-volt or 207- to 253-volt a-c supply. The a-c input cord plugs directly into a convenience outlet marked RECTIFIER on Terminal Box J–447/FGC–1 (outlet and heater panel).

b. Power Supply PP–737/FGC–1 contains two gas-filled rectifier tubes. It supplies 130 volts regulated dc, and 6.6 volts ac.

c. A front view of the PP–737/FGC–1 is shown in figure 24 and a rear view in figure 25.

20. Description of Power Supply PP–763/FGC–1X (Rectifier X–61680C)

a. Power Supply PP–763/FGC–1X is used only in the AN/FGC–1X model. It operates from a 25/60-cps, 103- to 127-volt or 207- to 253-volt a-c supply.

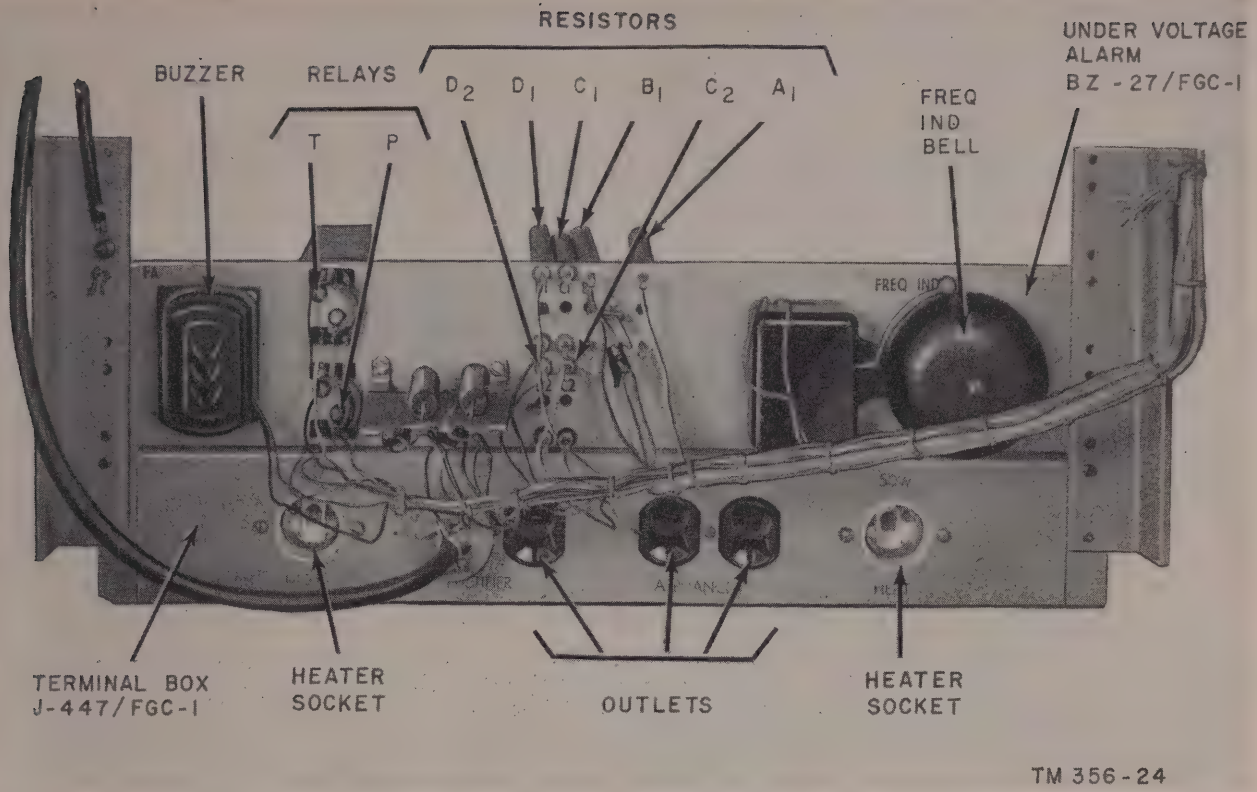

Figure 19. Under Voltage Alarm BZ–27/FGC–1 (alarm and miscellaneous panel) and Terminal Box J–447/FGC–1 (utility outlet and heater panel), rear view.

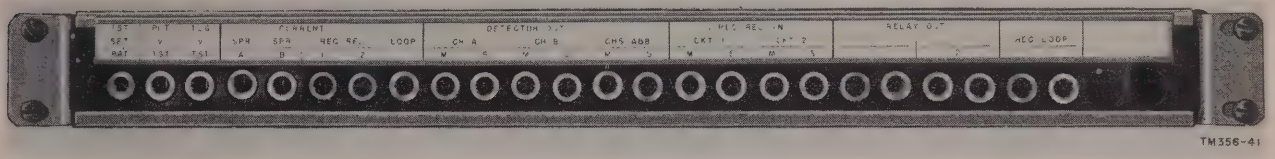

Figure 20. Jack panel, front view.

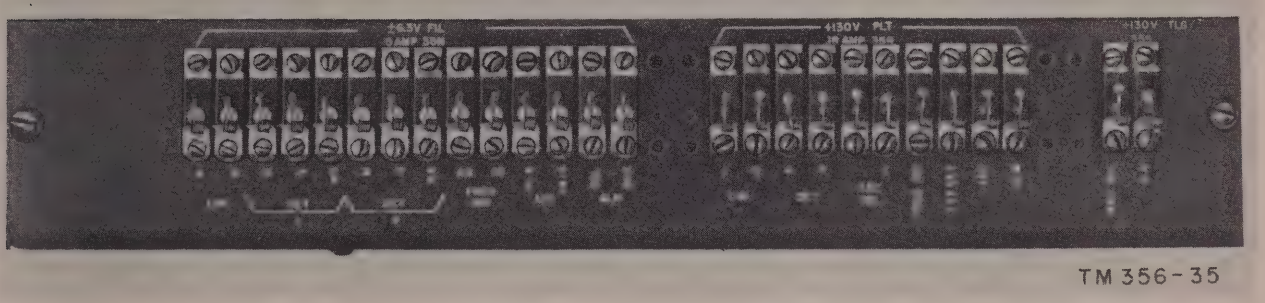

Figure 21. Fuse panel, front view.

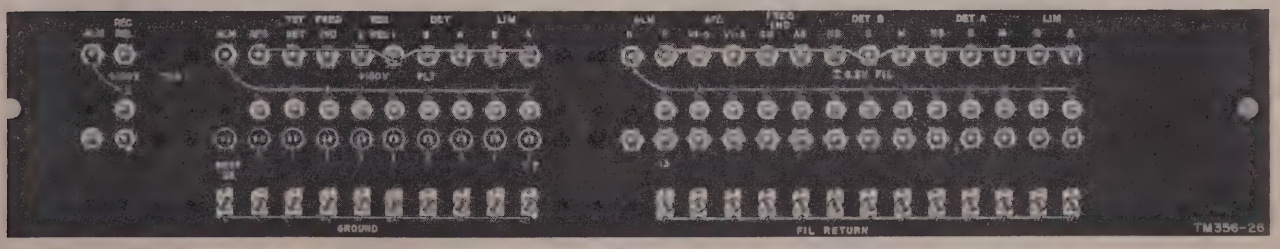

Figure 22. Fuse panel, rear view.

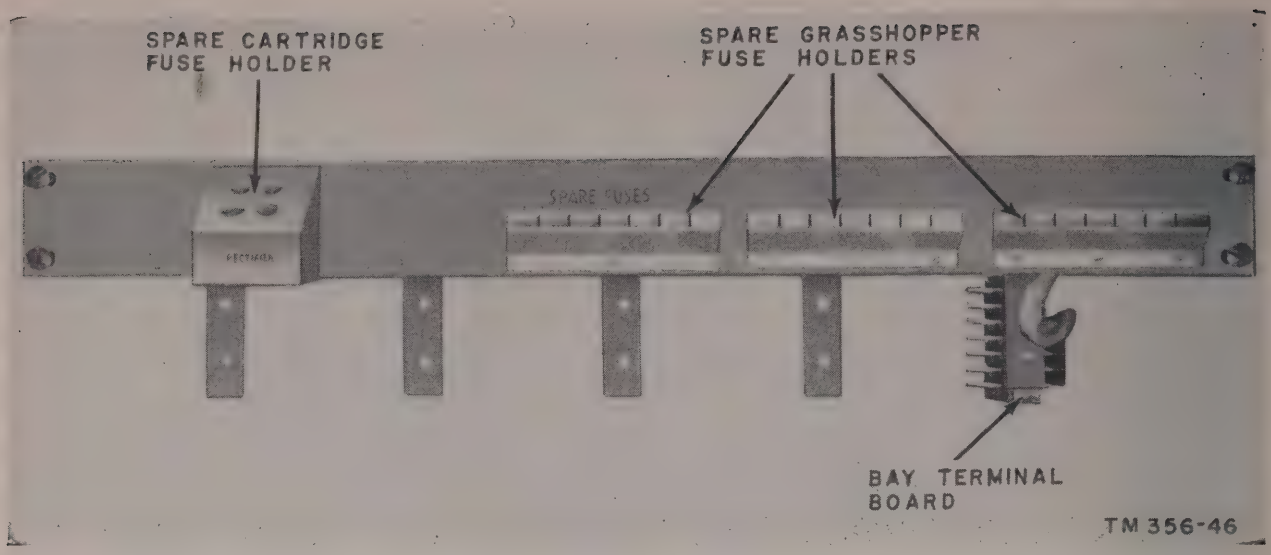

Figure 23. Spare fuse panel, front view.

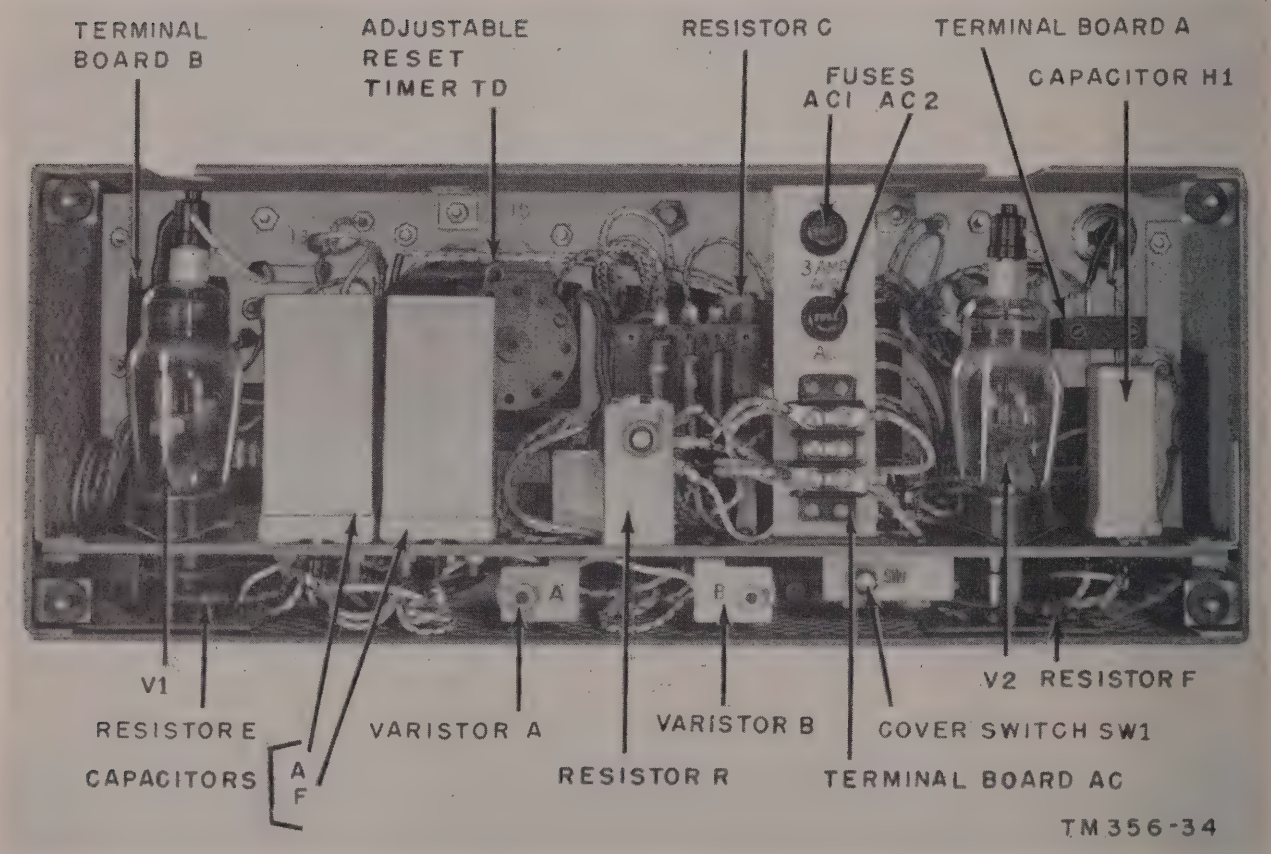

Figure 24. Power Supply PP–737/FGC–1, front view.

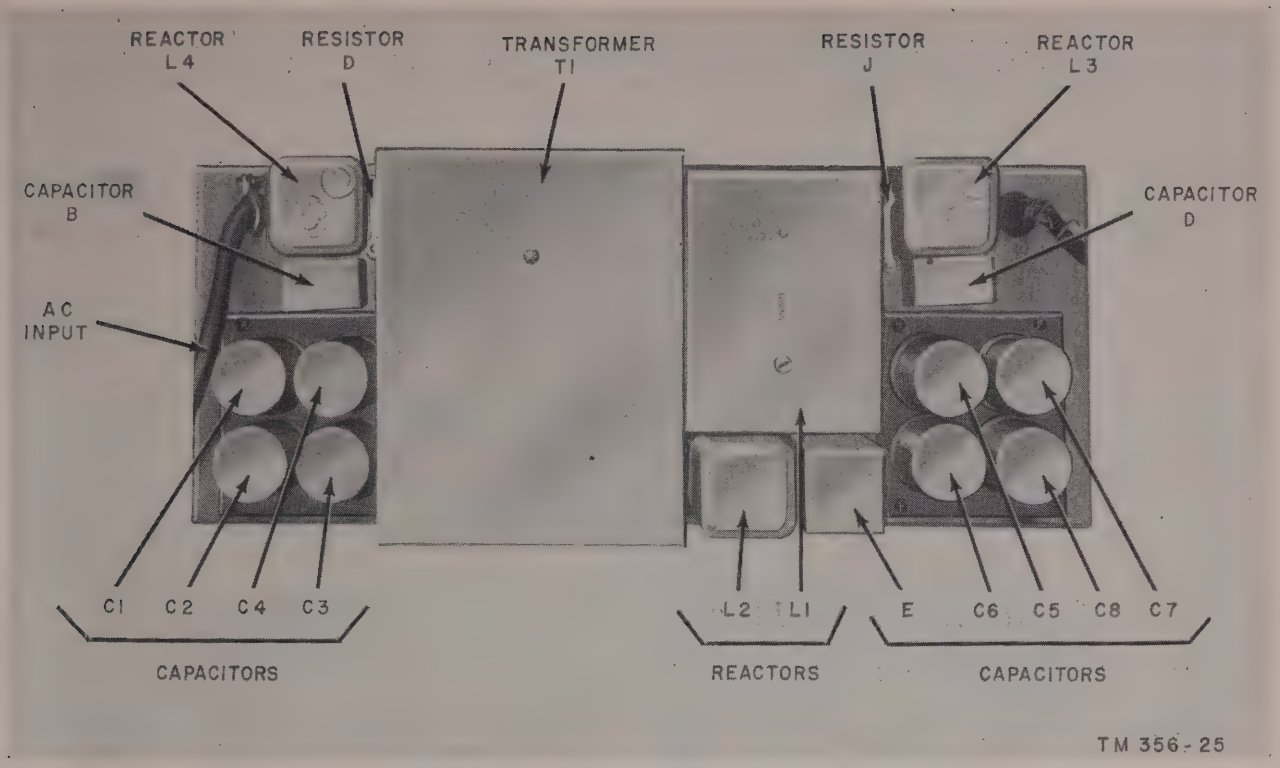

Figure 25. Power Supply PP–737/FGC–1, rear view.

b. Power Supply PP–763/FGC–1X is similar in operation and appearance to Power Supply PP–737/FGC–1 (par. 19). Differences between the two types of power supplies are described in paragraph 23*d*.

21. Description of Disk-Type Rectifier

a. The disk-type rectifier, when provided, is used to supply 130 ±3 volts dc with a maximum output of .24 ampere to the contacts of the receiver relay. The rectifier contains four stacks of selenium-disk varistors arranged as a full-wave rectifier.

b. The disk-type rectifier operates from a nominal 115- or 230-volt a-c supply. The a-c power cord plugs directly into a convenience outlet marked RECTIFIER on Terminal Box J–447/FGC–1.

c. The front panel contains a 115/230 volt a-c selector switch, an output terminal panel, fuse and spare fuseholders, and fine and coarse output voltage adjustment knobs.

d. A front view of the rectifier with the cover removed is shown in figure 26.

22. Running Spares

The following list of running spares is included with each AN/FGC–1(*). Heater lamps for both 120-volt operation and 240-volt operation are included.

38 tubes, type 6SJ7
10 tubes, type 6V6GTY
4 tubes, type 6SL7WGT
2 tubes, type 394A
4 tubes, type 6H6
2 tubes, type 6SA7Y
34 fuses, 5 amperes
30 fuses, .180 ampere
6 fuses, .250 ampere
14 fuses, 3 amperes
8 lamps, 120 volts
8 lamps, 240 volts

23. Differences in Models

The three radioteletype terminal equipment models described in this manual are designated AN/FGC–1, AN/FGC–1C, and AN/FGC–1X.

a. The AN/FGC–1 and the AN/FGC–1X differ only in the power supplies used. Model AN/FGC–1 includes Power Supply PP–737/FGC–1. Model AN/FGC–1X includes Power Supply PP–763/FGC–1X. Differences in these power supplies are indicated in the table below and may be seen in schematic form in figures 46 and 47.

Item	Power Supply PP-737/FGC-1	Power Supply PP-763/FGC-1X
A-c power source	50 to 60 cps	25 to 60 cps.
Fuse AC1 and AC2	3 amperes	5 amperes.
Output filter	Contains capacitors C1 through C5 on one side of reactor L2, and capacitors C7 and C8 on the other side. Each capacitor is 125 μf.	Contains capacitors C1 through C7 on one side of reactor L2, and capacitors C8 through C10 on the other side. Each capacitor is 200 μf.
Transformer T1	Signal Corps stock No. 2Z9623.1	Signal Corps stock No. 2Z9623.3.
Timer TD	Electronic timer (in modified equipments)	Adjustable reset timer.

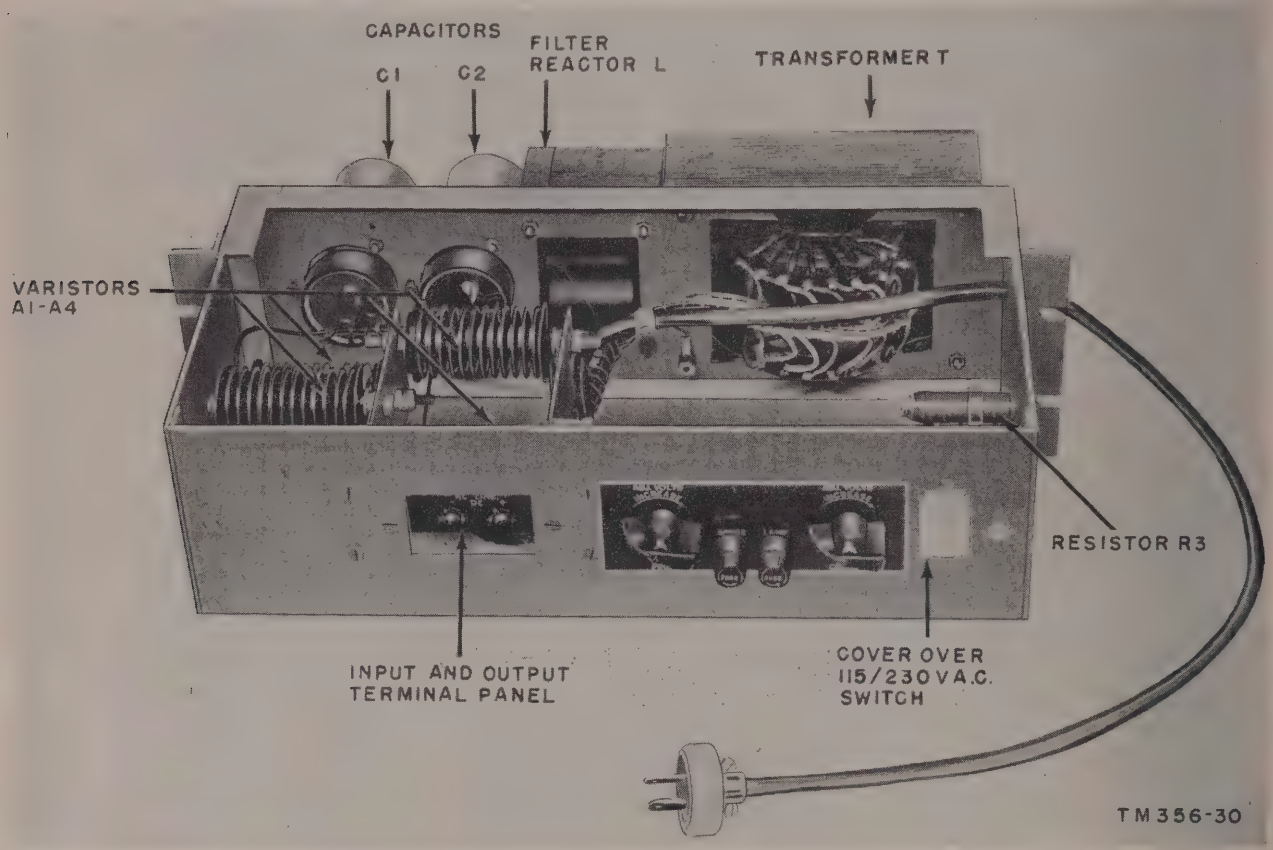

Figure 26. Disk-type rectifier front view, cover removed.

b. Army-Navy nomenclature has been assigned to some components of the AN/FGC–1(*). This nomenclature is shown on the front panels of AN/FGC–1C only. All models of AN/FGC–1(*) contain manufacturer's designations. A table showing manufacturer's designations and Army-Navy nomenclature appears in paragraph 7. Circuit element differences between the AN/FGC–1 and the AN/FGC–1C models are shown in the table below. Adjustable rest Timer TD has been replaced by electronic timer TD in the power supply of AN/FGC–1 model equipments per MWO SIG 11–356–1.

Component	Item	AN/FGC–1	AN/FGC–1C
Power Supply PP–737/FGC–1.	Relay R	Does not contain relay R	Contains relay R.
	Timer TD	Timer TD is an electronic timer	Timer TD is an adjustable reset timer.
Receiver Control C–948/FGC–1.	Capacitor N	Capacitor N is a single capacitor	Capacitor N consists of two capacitors in parallel.
	Capacitor C6	4,000 $\mu\mu$f	3,900 $\mu\mu$f.
Trigger Amplifier AM–591/FGC–1.	Resistor L	600 ohms	560 ohms.
	Resistor MB	600 ohms	560 ohms.
	Resistor SB	600 ohms	560 ohms.
Current Regulator CN–164/FGC–1.	Capacitor AK	.002 or .003 μf	.002 μf.
	Capacitor F	.004 or .006 μf	3,900 $\mu\mu$f.
	Resistor M	.4 meg	390,000 ohms.
	Resistor AC	.5 meg	510,000 ohms.
	Resistor OUT	320 ohms	350 ohms.

c. Twenty AN/FGC–1 bays of early manufacture contain power supplies in which the color coding of wires differs from the color coding shown in the wiring diagram in this manual. These twenty bays have serial numbers from the following group of twenty-four numbers: 2, 3, 4, 7, 10, 11, 12, 13, 17, 18, 20, 21, 22, 23, 24, 25, 27, 28, 31, 33, 38, 39, 40, and 45.

d. Patch cords used in making a-c (voice-frequency) measurements in the AN/FGC–1 and AN/FGC–1X models have red, glazed-cotton outer insulation. The corresponding patch cords in the AN/FGC–1C are green. Three-conductor patch cords used in making d-c measurements in the AN/FGC–1 and AN/FGC–1X are gray. The corresponding patch cords in the AN/FGC–1C are black.

CHAPTER 2

OPERATING INSTRUCTIONS

Section I. SERVICE UPON RECEIPT OF RADIOTELETYPE TERMINAL EQUIPMENT AN/FGC–1(*)

24. Siting

a. External Requirements. The best location for wire equipment depends on local conditions such as the need to house the equipment where its shelter cannot be seen; the type of housing available; possible installation in a vehicle; the terrain; and the need of easy access to messengers. If possible, choose a location on high ground, clear of densely wooded areas. See that drainage is adequate to prevent flooding the interior of the shelter. In addition, the location must be suitable for the associated radio equipment.

b. Internal Requirements. The choice of location for Radioteletype Terminal Equipment AN/FGC–1(*) depends on the location of the radio receiver with which it is associated. The AN/FGC–1(*) cabinet usually is installed beside the cabinet of the associated radio receiver. The shelter for the equipment must meet the following requirements:

(1) The floor must be dry, secure (preferably concrete), and capable of sustaining the weight of the equipment in a level position without vibration.

(2) Sufficient space must be available to permit satisfactory operation and maintenance. Sufficient space must be allowed for door swing, for passageways, and for easy access to the equipment.

(3) Adequate lighting for both day and night operation must be provided. The equipment should be positioned so that panel designations may be read easily by the operating personnel. Artificial lighting should be installed so that the light falls directly on the panels. A portable drop lamp and extension cord are convenient assets for the operating and maintenance personnel.

25. Uncrating, Unpacking, and Checking New Equipment

Note. For used or reconditioned equipment, refer to paragraph 36.

a. General.

(1) Equipment may be shipped in oversea packing cases or in domestic packing cases. When new equipment is received, select a location where the equipment may be unpacked without exposure to the elements and which is convenient to the permanent or semipermanent installation of the equipment. The instructions in *b* below apply to equipment shipped in export packing cases, and instructions in *c* below apply to equipment shipped in domestic packing cases. Aside from checking to make sure that all carrying cases are present and that the equipment is undamaged, no special unpacking and uncrating procedures are necessary for equipment shipped in carrying cases.

(2) Be careful when uncrating the equipment. Avoid thrusting tools into the interior of the shipping containers. When unpacking, do not damage packaging materials and containers any more than necessary. Stow the interior packaging materials and containers within the wooden packing case.

b. Step-by-step instructions for Uncrating and Unpacking Export Shipments (fig. 4).

(1) Cut and fold back the steel straps.

(2) Remove the nails with a nail puller. Remove the top and two sides of the crate. Do not attempt to pry off the sides or top; the equipment may be damaged.

(3) Cut open and fold back the barriers and cushioning shrouds.

(4) Cut and fold back the steel straps from the mounted unit.

(5) Remove the bags of desiccant and the fiberboard box which contains spare parts and accessories.

(6) Lift the equipment from the mounting base and out of the crate. Position the equipment as specified in paragraph 26.

Note. It is not necessary to remove the mounting base from the bottom of the skidded crate to remove the equipment. When the equipment is repacked, however, the mounting base must be removed to install new water-vaporproof barrier material, cushioning shrouds, and steel straps.

(7) Inspect the equipment for possible damage incurred during shipment.

(8) Check the contents of the packing case against the master packing slip.

c. Unpacking Domestic Packing Cases. The AN/FGC–1 (*) may be received in domestic packing cases. Instructions for unpacking domestic shipments are the same as those given in *b* above.

Note. Save the original packing cases and containers for both export and domestic shipments. They can be used again when the equipment is repacked for storage or shipment.

26. Installation of Radioteletype Terminal Equipment AN/FGC–1(*)

a. Remove the AN/FGC–1 (*) cabinet from its crate in accordance with the unpacking, uncrating, and checking instructions (par. 25).

b. Unless another location is specified, place the AN/FGC–1 (*) cabinet adjacent to (to the right of) the cabinet of the associated radio receiver.

c. Allow at least a 2½-foot clearance between the front of the AN/FGC–1 (*) cabinet and the nearest wall or other obstruction.

d. Allow at least a 2½-foot clearance between the back of the AN/FGC–1 (*) cabinet and the nearest wall or other obstruction for door swing and access to the equipment.

e. Allow at least a 2-foot clearance on one side of the AN/FGC–1 (*) cabinet to serve as a passageway to the rear of the cabinet.

f. Fasten the AN/FGC–1 (*) cabinet to the floor with lag or expansion screws through the holes in the bottom corner brackets of the cabinet.

g. Bolt the AN/FGC–1(*) cabinet to the associated radio receiver bay. Install copper bonding braids between the two cabinets at the top and bottom. Scrape off the paint under the braids where they are bolted to the cabinets to provide good electrical contact.

27. Connections, General

a. Paragraphs 28 through 33 describe connections which will be made between the AN/FGC–1(*) and Diversity Receiving Equipments AN/FRR–3 and AN/FRR–3A. When other radio receivers are used, corresponding connections will be made, but the radio terminals will bear different designations from the AN/FRR–3 or AN/FRR–3A terminal designations. The table below lists the AN/FRR–3 and AN/FRR–3A terminals and describes them so that the corresponding terminals on other radio receivers may be identified.

AN/FRR–3 and AN/FRR–3A terminal designations	Description
AUDIO OUTPUT 600 Ω and GND.	These terminals are the audio output terminals of the radio receiver which are connected to the input of the AN/FGC–1(*) current limiter. Note that terminal 2A of the current limiter terminal board is grounded.
AFC1 and AFC2	The automatic frequency control voltage output from the AN/FGC–1(*) is connected to these terminals. When terminal AFC2 is positive with respect to terminal AFC1, the AN/FRR–3 or AN/FRR–3A increases the frequency of the audio output.
AN/FGC–1 DISABLING.	The two DISABLING terminals are wired to the contacts of a relay in the radio receiver. When the relay is energized, terminals 15 and 31 on the receive relay terminal board are connected to the negative side of the +130 volt telegraph supply. Connection of these terminals to the negative side of the 130 V telegraph supply activates the monitor circuit in the AN/FGC–1(*).

b. Paragraphs 32 and 33 describe a-c power connections and monitor circuit connections between the AN/FGC–1(*) and the AN/FRR–3A. Wiring changes which must be made in the AN/FGC–1(*) if other radio receivers are used are contained in paragraph 33.

c. When low-frequency radio receivers (70 kc (kilocycle) to 500 kc) are used in conjunction with the AN/FGC–1(*), wiring changes must be made in the AN/FGC–1(*). These wiring changes are described in paragraph 35.

d. The connections referred to in *a*, *b*, and *c* above provide for polar operation in the loop. Make the wiring changes described in paragraph 34 if neutral loop operation is required.

e. External connections to the AN/FGC–1(*) are brought into the cabinet through holes at the top or bottom of the cabinet. Any wires which must pass from top to bottom of the cabinet inside the cabinet will be tied to cabinet channel brackets or to existing cables. The bay terminal board is located at the top of the bay on the rear of the spare fuse panel. Wires carrying signals which are applied to the AN/FGC–1(*) will be connected to the left side (as viewed from the rear) of the bay terminal board. Wires carrying signals leaving the AN/FGC–1(*) will be connected to the right side of the bay terminal board.

28. Ground Connections

Connect an 8-gage wire from a water pipe or other good ground to the ground punching on the cabinet upright. The ground punching is located on the lower left cabinet upright as viewed from the rear.

29. Input Signal Connections

a. Connect one wire of a shielded pair from terminal 1A (terminal 1 on terminal board A) of channel A Current Regulator CN–164/FGC–1 (current limiter A) to the OUTPUT 600 Ω terminal on the channel A radio receiver. Connect the other wire of the pair from terminal 2A on current limiter A terminal board to GND on the channel A radio receiver. Connect the shield to terminal 2A on current limiter A terminal board.

b. The shielded pair between the radio receivers and the current limiters should be as short as possible. Run the pair through a hole in the cabinet, at the bottom left, into a facing hole in the radio receiver bay.

c. Use another shielded pair to connect the corresponding terminals on current limiter B to the corresponding terminals on channel B radio receiver.

30. Output Signal Connections

Connect the outgoing loop wire to terminal 1 of the bay terminal board. Connect the return side of the loop to terminal 2 of the bay terminal board.

Note. A ground return loop *must not* be used when Power Supply PP–737/FGC–1 or Power Supply PP–763/FGC–1 is used to supply both plate and loop currents. If a ground return loop is used, a separate ungrounded power supply, a disk-type rectifier, must be installed (par. 38*a*).

31. Automatic Frequency Control Connections

Connect one wire of a shielded pair having high insulation resistance from terminal 5B on Receiver Control C–948/FGC–1 (automatic frequency control unit) to terminal AFC2 (right-hand terminal) of the radio receiver. Connect the other wire of the pair from terminal 7B on the automatic frequency control panel to terminal AFC1 (left-hand terminal) of the radio receiver. Connect the shield to terminal 8B.

32. Monitor Circuit Connections

Use a shielded pair to connect terminals 9 and 10 on the bay terminal board to terminals marked AN/FGC–1 DISABLING on the radio receivers. Connect the shield to terminal 11 on the bay terminal board.

33. A-c Power Connections

a. When Used With AN/FRR–3 or AN/FRR–3A Radio Receivers.

(1) Remove the power plug or plugs from the RECTIFIER outlets of Terminal Box J–447/FGC–1 (utility outlet and heater panel). Check the HEAT lamp voltage ratings. They must correspond to the voltage rating of the power source. Replace the HEAT lamps with lamps of proper voltage rating if necessary.

(2) Place the four-conductor main power-cord plug of the AN/FGC–1(*) in the receptacle of the AN/FRR–3 or AN/FRR–3A radio receiver.

(3) Operate the main power switch on the radio receiver to the ON position. Operate the DIAL-OPER-SEND switch on the radio receiver to the DIAL position, and dial 02 on the remote control dial. This operation will disconnect all a-c

power from the AN/FGC-1(*) except from the HEAT lamps and the APPLIANCE outlet. Check the HEAT lamps to see that they are lighted.

(4) If the equipment is being placed in initial operation, or returned to operation after an extended period of nonoperation, close the doors of the bay and wait until the equipment is thoroughly dry before continuing with the a-c power connections. When the equipment is dry, remove the two flat pieces of sheet steel which close the louvers in each door of the cabinet, and store them. Replace the lower covers during any extended period of nonoperation.

(5) Connect the a-c power cord plug of the power supply to one of the RECTIFIER outlets. Connect the a-c power cord plug of the disk-type rectifier (if provided) to the other RECTIFIER outlet.

b. When Used With Other Radio Receivers. The following changes must be made in Terminal Box J-447/FGC-1 (utility outlet and heater panel) when radio receivers other than the AN/FRR-3 or AN/FRR-3A are used with the AN/FGC-1(*). These changes involve the removal of the four-conductor power cord and plug and the substitution of a two-conductor power cord and plug.

(1) Remove the wire from the center contact of the left HEAT lamp receptacle. This wire, labeled 205 in figure 60, is one of the conductors of the four-conductor power cord. Do not disconnect the red-green wire connected to the same point.

(2) Remove the wire from the lower connection point on the RECTIFIER outlet. This wire, labeled 205 on figure 60, is one of the conductors of the four-conductor power cord.

(3) Remove the wire from the lower connection point of the front APPLIANCES outlet. This wire, labeled 205A in figure 60, is one of the conductors of the four-conductor power cord. Do not disconnect the red wire connected to the same point.

(4) Strap the center contact of the left HEAT lamp receptacle, the lower connection point of the RECTIFIER outlet, and the lower connection point of the APPLIANCES outlet. (These three points are the points from which wires were disconnected in (1) through (3) above.) Use #16 AM, rubber-covered wire (or equivalent) to form the strap.

(5) Remove the remaining wire of the four-conductor power cord from the upper connection point of the front APPLIANCES outlet. Do not disconnect the slate wire connected to the same point.

(6) Obtain a sufficient length of two-conductor, rubber-covered power cord to reach from the AN/FGC-1(*) bay to the nearest convenient a-c power source.

(7) Connect one conductor of the two-conductor cord to the lower connection point of the front APPLIANCES outlet.

(8) Connect the other conductor of the two-conductor cord to the upper connection point of the front APPLIANCES outlet.

(9) Connect a suitable two-conductor plug to the other end of the cable. If a polarized plug is used, connect the ground side of the plug to the cable conductor which is connected to the lower connection point of the front APPLIANCES outlet.

34. Connections to Provide Neutral Loop Operation

If neutral loop operation (current flow in the loop for a mark signal, no current flow for a space signal) is desired, make the wiring changes described in *a* through *c* below. These wiring changes must be made in both receive relay circuits of Telegraph Repeater TH-11/FGC-1 (receive relay panel) (par. 10).

a. Remove the strap between the top terminals of resistors J and K.

b. Remove the red lead from the top terminal of resistor K and connect it to the top terminal of resistor J.

c. Add a resistor in parallel with resistor J. Calculate the resistance needed from the information in (1) through (5) below.

(1) The minimum loop current for operation of a neutral loop is .060 amp. To achieve this current, the maximum loop circuit current must not exceed 2,000 ohms. Resistor J in the loop circuit has a resistance of 3,500 ohms. A resistor must be placed in parallel with resistor J to reduce the effective resistance in the loop.

(2) Measure the resistance of the loop external to the AN/FGC-1(*).

(3) Subtract this value from 2,000 ohms. The difference is the effective resistance of resistor J and its parallel resistor.

(4) Calculate the resistance of the paralleling resistor. For example, if the external loop resistance is found to be 200 ohms;

$$2{,}000-200=1{,}800$$

The effective resistance of resistor J and its parallel resistor will be 1,800 ohms. Resistor J has a resistance of 3,500 ohms.

$$\frac{3500\times1800}{3500-1800}=3700 \text{ (approximately)}$$

The resistor to be placed in parallel with resistor J in this example must have a resistance of 3,700 ohms.

(5) Use a resistor having a power dissipation rating of at least 5 watts.

Note. Do not use the 1,100 ohm section of resistor J as part of a series dropping arrangement instead of adding a resistor in parallel with resistor J.

d. Place a tag on the receive relay panel indicating that these changes have been made.

35. Low-Frequency Radio Connections

When low radio frequencies (70 kc to 500 kc) are used in the radio portion of the system, a single radio receiver is used (fig. 3). Space diversity reception is not employed. Only one channel of the AN/FGC–1 (*) is used; the other channel is disabled. A frequency shift of 170 cps is used to produce mark and space signals. The mark frequency becomes 2,465 cps and the space frequency 2,635 cps. The M CH filter (Sig. C stock No. 3Z1894–3.24) must be replaced by filter, Signal Corps stock No. 3Z1894–16.1 in order to pass the 2,465 cps mark signals. The S CH filter (Sig. C stock No. 3Z1892–3.25) must be replaced by filter, Signal Corps stock No. 3Z1894–16.2 in order to pass the 2,635 cps space signals. Reactor D in the frequency indicator circuit must be replaced by a 10.6 henry reactor paralleled by a .02 μf capacitor. The output circuit of the current limiter panel must be modified to provide a higher level output signal, since the replacement M CH and S CH filters have a higher insertion loss than the original filters. The specific manner in which these changes will be accomplished will be determined by the local conditions.

36. Service Upon Receipt of Used or Reconditioned Equipment

a. Follow the instructions in paragraph 25 for uncrating, unpacking, and checking the equipment.

b. Check the used or reconditioned equipment for tags or other indications pertaining to changes in the wiring of the equipment. If any changes in wiring have been made, note the changes in this manual, preferably on the schematic diagram.

c. Perform the installation and connection procedures given in paragraphs 26 through 35.

Section II. INITIAL ADJUSTMENT OF RADIOTELETYPE TERMINAL EQUIPMENT AN/FGC–1(*)

37. Preoperational Checks

a. Power Supply PP–737/FGC–1 and Power Supply PP–763/FGC–1X.

(1) Remove the power supply plug from the RECTIFIER outlet and remove the power supply cover.

(2) Check for damage in shipment.

(3) Check to see that correct fuses and tubes are in place. The tubes should be type 394A. The fuses in Power Supply PP–737/FGC–1 should be 3-ampere fuses; the fuses in Power Supply PP–763/FGC–1X should be 5-ampere fuses.

(4) If a disk-type rectifier is not provided, check to see that the wiring in the bay is correct for operation without the disk-type rectifier. If the +130V TLG REC REL fuse is connected to pin 7 of the power supply terminal board, the wiring is correct. If the fuse is not connected to pin 7 of the power supply terminal board, follow the wiring instructions in *b* below for the removal of a disk-type rectifier.

(5) Check to see if the electrolytic capacitors are stamped with the date of manufacture; if not, tag them with the installation date.

(6) Check to see that the correct power supply is furnished for the frequency of the a-c

power source. Power Supply PP-737/-FGC-1 (rectifier X-61680B) operates from a 50- to 60-cps source. Power Supply PP-763/FGC-1X (rectifier X-61680C) operates from a power supply in the range of 25 to 60 cps.

(7) Determine whether the a-c input is in the 103- to 127-volt range or in the 207- to 253-volt range. The instruction plate below terminal board AC describes the connections for each input voltage. Check to see that the connections are correct for the voltage supplied. Tighten all screws on terminal board AC with a screw driver whether or not connections are changed.

(8) Remove tubes V1 and V2 and turn variable resistor R to the maximum counterclockwise position. Press the plunger of switch SW1.

Warning: Do not touch any metal inside the power supply when this switch is operated. Dangerous voltages exist there. Do not permit the tube caps to touch any part of the power supply.

(*a*) If the power supply contains a mechanical adjustable reset timer TD, observe the operation of the timer TD. A slight click should be heard 14 to 17 seconds after 60-cps power is applied or 32 to 42 seconds after 25-cps power is applied. Release switch SW1. Timer TD should release in 5 seconds or less after switch SW1 is released. If the timer is not operating properly, refer to paragraphs 92 and 93.

(*b*) If the power supply contains an electronic timer TD, observe the operation time of timer TD. A slight click should be heard from relay K1 17 to 23 seconds after power is applied. The release time of relay K2 is rated at 4 seconds; however, since it is inclosed, it is not possible to observe its release time directly. The release time can be checked by the procedure described in (*c*) through (*e*) below.

(*c*) Release switch SW1. Wait 5 seconds for relay K2 to cool.

(*d*) Press the plunger of switch SW1.

(*e*) Observe whether the time for closure of relay K1 is again 17 to 23 seconds ((*a*) above). If this requirement is met, the timer is operating properly.

(*f*) If timer TD is not operating properly, refer to paragraphs 92 and 93.

(9) If timer TD is operating properly, replace the tubes, tube caps, and cover of the power supply.

(10) Replace the power supply plug in the RECTIFIER receptacle.

b. Disk-Type Rectifier (KS–5844). If a disk-type rectifier is supplied, follow the preoperational procedures outlined below.

(1) Remove the disk-type rectifier power plug from the RECTIFIER outlet.

(2) Check to see that fuses of proper capacity (1 ampere) have been provided in the line fuse and in the spare fuse holders.

(3) Operate the 115/230-volt toggle switch SW4 to the position corresponding to the voltage of the a-c power supply.

(4) Check to see if the electrolytic capacitors are stamped with the date of manufacture; if not, tag them with the installation date.

Note. A RECTIFIER outlet should not be used for appliances. The relay contacts in the radio receiver which energize this circuit might be overloaded by the current drawn by an appliance.

(5) Check to see that the disk-type rectifier has been wired into the circuit. If the +130V TLG REC REL fuse is connected to the disk-type rectifier, this wiring has been accomplished. If the fuse is connected to pin 7 of the terminal board of Power Supply PP–737/FGC–1 or PP–763/FGC–1X, the wiring has not been accomplished. Wiring instructions for placing the disk-type rectifier in the circuit are given in paragraph 38*a*.

c. Terminal Box J–447/FGC–1 (Utility Outlet and Heater Panel). Ascertain that the voltage rating of the 50-watt heater lamps corresponds to the a-c power supply voltage. For a power supply voltage of 103 to 127 volts, use 120-volt lamps. For a power supply voltage of 230 to 240 volts, use 240-volt lamps.

38. Installation or Removal of Disk-type Rectifier

The disk-type rectifier is not supplied with most AN/FGC–1(*) equipments. If the disk-type rectifier is supplied, it must be installed as described

in *a* below. Some AN/FGC–1(*) equipments not containing a disk-type rectifier are shipped without the wiring changes necessary when Power Supply PP–737/FGC–1 or PP–763/FGC–1X is used to supply loop current. Instructions in making these wiring changes are given in *b* below.

a. Installation of Disk-type Rectifier.

(1) Disconnect the lead between pin 7 of the power supply terminal board (the + terminal of capacitor C5 on some AN/FGC–1(*) equipments) and the lower post of the +130V TLG REG REL fuse. Disconnect the strap between terminals 4 and 16 of the receive relay terminal board. Do not disturb the black, local-cable lead between terminals 4 and 20.

(2) Connect straps between terminals 4 and 11 and between terminals 27 and 20 on the receive relay terminal board.

(3) Connect the yellow lead (which connects to the +130V TLG REC REL fuse) of the local cable to the + terminal of the disk-type rectifier.

(4) Connect the two blue leads of the local cable to the — terminal of the disk-type rectifier.

b. Removal of Disk-type Rectifier.

(1) Remove the straps between terminals 4 and 11 and between terminals 20 and 27 on the receive relay terminal board. Do not disturb the black, local-cable lead between terminals 4 and 20.

(2) Strap terminals 4 and 16 on the receive relay terminal board.

(3) If (G) wiring is to be used (figs. 48, 49, 59, and 60), connect a lead between the + (inside) terminal of capacitor C5 of the power supply and pin 7 of the power supply terminal board.

(4) If (J) wiring is to be used (figs. 46, 47, 57, and 58), connect a lead between the + (inside) terminal of capacitor C5 and the movable contact of relay R in the power supply. Connect another lead from the fixed contact of relay R to pin 7 of the power supply terminal board.

(5) Connect a lead from pin 7 of the power supply terminal board to the lower post of the +130V TLG REC REL fuse.

(6) Remove the +130V TLG REC REL fuse, and plug the power supply a-c power cord into the RECTIFIER outlet.

(7) Measure the voltage in the TLG V TST jack. (Refer to par. 40*d* for use of the meter circuit.) The voltage indication should be 0.

(8) Remove the power plug from the RECTIFIER outlet and replace the fuse. Reconnect the a-c power and again check the voltage at the TLG V TST jack. The meter hould indicate 65 ±2 (130 volts ±4 volts).

39. Preoperational Tests and Adjustments

Preoperational tests and adjustments must be performed before placing the AN/FGC–1(*) in operation. The preoperational tests and adjustments are described in paragraphs 41 through 49. The use of patch cords and the frequency indicator METER when making preoperational tests and adjustments is explained in paragraph 40. Perform the tests and adjustments in the order in which they are presented in this manual.

40. Use of Patch Cords and Meter Circuit

Patch cords equipped with three types of plugs are used for preoperational tests and patching in AN/FGG–1(*) equipments. Plugs and their uses are described in *a* through *c* below. The meter circuit can be used to measure direct voltages and currents, signal frequencies, and audio-frequency power levels. Adjustment, connections, and switch settings for the various uses of the meter are discussed in *d* through *g* below.

Warnings: 1. Do not permit one end of a patch cord to be connected to a jack and the other end to hang loose. Serious electric shock to the operator or damage to the equipment may result if this warning is not observed. When patch cords are not in use, hang them on the hook provided on the left cabinet upright.

2. Do not make any patches other than those described in this manual. Damage to the equipment may result from unauthorized patches.

a. Three-Conductor Plugs. Cords equipped with three-conductor plugs (tip, ring, and sleeve) are used to patch the D-C METER jack to any of the jacks provided for measuring dc or voltage. The tip and ring connections of these plugs are used; the sleeve connection is not used. The plugs have a red shell.

b. Twin Two-Conductor Plugs. Cords equipped with twin, two-conductor plugs (tip and sleeve) are used to patch d-c signals (from DETECTOR

OUT CH A, DETECTOR OUT CH B, or DETECTOR OUT CHS A & B jacks to REC REL IN CKT 1 or CKT 2 jacks; or from RELAY OUT 1 or RELAY OUT 2 jacks to REC LOOP jacks). Always insert these plugs with the knurled edge to the left. The sleeve of these plugs is not used.

c. Two-Conductor Plugs. Cords equipped with two-conductor plugs (tip and sleeve) are used for all other patches.

d. Meter Adjustment. Adjust the meter in the following manner:

(1) Remove any plug which may be in the A-C or D-C METER jacks.

(2) If the meter does not read 0 (the center of the scale), adjust the screw in the meter face to cause the meter to read 0.

e. Direct Voltage and Current Measurements. When it is necessary to make direct voltage or current measurements, proceed as outlined in (1) through (3) below.

(1) Operate the A-C D-C METER switch to the d-c position.

(2) Connect the D-C METER jack to the jack which carries the voltage or current to be measured.

(3) If it is desired to convert the meter indication to volts or ma, use the table below. The table below shows the approximate value of voltage or current which will cause the full-scale deflection of the meter at various d-c test points. The meter is calibrated arithmetically.

Current or voltage to be measured	Jack	Approximate value for full-scale deflection
Detector output or receiver relay current.	CURRENT REC. REL.	50 ma.
Receiving loop current.	LOOP CURRENT	50 ma.
Noise suppression circuit output.	CURRENT SPR A or CURRENT SPR B.	20 ma.
Plate voltage supply	PLT V TST	200 v.
Telegraph voltage supply.	TLG V TST	200 v.

f. Audio-Frequency Power-Level Measurements. When it is necessary to make power-level measurements, proceed as outlined in (1) through (3) following.

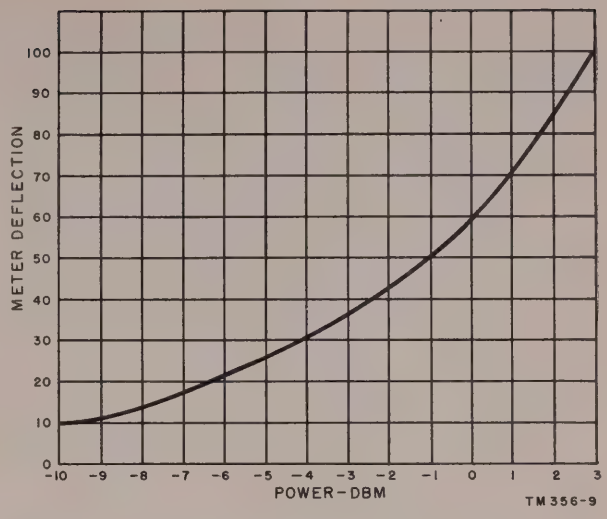

Figure 27. Meter calibration for audio-frequency power-level measurements.

(1) Turn the METER switch knob to the a-c position.

(2) Patch the jack which carries the current to be measured to the A-C METER jack.

(3) Figure 27 shows the approximate power level in dbm (decibels referred to 1 milliwatt in 600 ohms) corresponding to various meter deflections when the meter terminates a 600-ohm circuit.

g. Signal Frequency Measurements. Instructions for using the meter to measure signal frequencies are included in paragraphs 45 and 46.

41. Power Supply Operating Voltage Adjustment

a. Turn the meter knob to the d-c position.

b. Patch the D-C METER jack to the PLT V TST jack using a cord equipped with three-conductor plugs.

c. Connect power to the AN/FGC–1(*) equipment by dialing 01 at the radio receiver. Wait for timer TD to operate.

d. Adjust variable resistor R with a screw driver (through the hole in the cover) until the meter reads 65 (130 volts). If the meter reads 0, refer to paragraph 109.

e. Readjust variable resistor R approximately 20 minutes after the initial adjustment.

42. Disk-Type Rectifier Operating Voltage Adjustment (If Disk-Type Rectifier Is Provided)

a. Turn the meter knob to the d-c position.

b. Turn the ADJ VOLTS COARSE and ADJ

VOLTS FINE knobs to the exteme low-voltage positions.

c. Patch the D-C METER jack to the TLG V TST jack using a cord equipped with three-conductor plugs.

d. Plug the power cord into one of the RECTIFIER outlets on the outlet and heater panel.

e. Adjust the ADJ VOLTS knobs to obtain a meter reading of 65 ±2 (130 volts ±4 volts).

f. If the meter reads 0, refer to paragraph 109.

43. Current Limiter Adjustment

The following procedure is for the purpose of adjusting the output levels of the current limiter panels.

a. Apply power to the AN/FGC–1(*).

b. Turn the METER switch to the a-c position.

c. Patch the NORMAL TEST LEVEL jack (on the frequency indicator panel) to the A-C METER jack. Use a cord equipped with two-conductor plugs.

d. Note and record the meter reading.

e. Remove the patch cord.

f. Patch the NORMAL TEST LEVEL jack to the channel B INP FILT IN jack. Use a cord equipped with two-conductor plugs.

g. Patch the channel B CURR LIM OUT jack to the A-C METER jack. Use a cord equipped with two-conductor plugs.

h. Adjust variable resistor OUT on current limiter B to obtain the same meter reading as was obtained in *d* above.

i. Repeat the procedure of *f*, *g*, and *h* above; use channel A instead of channel B.

44. Detector Sensitivity Adjustment

The detector sensitivity adjustment which will produce the best operating level for the detectors is dependent on the signal-to-noise ratio. Since the signal-to-noise ratio will vary from day to day, or even from hour to hour, no one setting of the detector sensitivity may be considered the best setting. The sensitivity adjustment described below will produce a detector operating level which is about 7 db above the level which makes the output current one-half of its maximum value. This operating level will provide satisfactory equipment performance in the normal range through which the signal-to-noise ratio will vary.

a. Insert open-circuit plugs (dummy plugs) into the CURR LIM OUT jacks of current limiter A and current limiter B. The procedures described in *b* through *l* below apply to channel A.

b. Operate the 1 TST switch to the TST position.

c. Patch the NORMAL TEST LEVEL jack to the PAD IN jack.

d. Patch the PAD OUT jack to the M DET IN jack.

e. Turn variable resistor ADJ M REC GAIN of channel A to the maximum clockwise position.

f. Patch the CURRENT REC REL 1 jack to the D-C METER jack, and operate the METER switch to the d-c position.

g. Note and record the meter reading. The meter should read between +20 and +40.

h. Depress and hold the ADJ REC GAIN button of channel A and turn variable resistor ADJ M REC GAIN counterclockwise until the meter indication is one-half of the indication noted in *g* above.

i. Patch the PAD OUT jack to the S DET IN jack.

j. Turn variable resistor ADJ S REC GAIN of channel A to the maximum clockwise position.

k. Note and record the meter reading. The meter should read between −20 and −40.

l. Depress and hold the ADJ REC GAIN button of channel A and turn variable resistor ADJ S REC GAIN counterclockwise until the meter indication is one-half of the indication noted in *k* above.

m. Repeat the procedure of *a* through *l* above; use channel B instead of channel A.

45. Frequency Indicator Calibration

The following procedure is for the purpose of adjusting the frequency indicator circuit so that a zero indication is obtained on the meter when the mark frequency receive from the radio receiver is 2,125 cps.

a. Request the distant radio transmitter to transmit a steady mark signal.

b. Turn the METER switch to the d-c position.

c. Patch the D-C METER jack to the FREQ IND OUT jack. Use a cord equipped with three-conductor plugs.

d. Depress the FREQ IND CAL switch (push button) and hold it operated.

e. Adjust variable resistor ZERO ADJ on the frequency indicator panel to obtain a reading of 0 on the meter.

f. Release the FREQ IND CAL switch. Remove the patch cord.

46. Automatic Frequency Control Unit Adjustment

The following procedure is for the purpose of adjusting the automatic frequency control unit to maintain the mark frequency close to 2,125 cps. The procedure includes a test to determine whether the spread (difference) between the mark and space frequencies is 850 cps.

a. Request the distant radio transmitter to transmit steady mark signals.

b. Calibrate the frequency indicator circuit (par. 45) if this has not been done already.

c. Turn the METER switch to the d-c position.

d. Patch the D-C METER jack to the FREQ IND OUT jack. Use a cord equipped with three-conductor plugs.

e. Turn the AFC switch to the OFF position.

f. Press and release the AFC DISCHG switch (push button).

g. Adjust the radio receiver tuning and output level as described in TM 11–872 if Diversity Receiving Equipments AN/FRR–3 or AN/FRR–3A are used. If other radio receivers are used, follow the tuning procedure and output level adjustment for those radio receivers as described in the appropriate technical manual.

h. Turn the AFC switch to the ON position.

i. Adjust variable resistor FREQ ADJ to obtain a meter reading of 0.

j. Request the distant transmitter to transmit a test message. If the meter reading fluctuates more than ±5 during the test message, readjust variable resistor FREQ ADJ.

k. If the steady meter reading exceeds ±15 during the test message, the mark and space frequency spread differs from 850 cps by an unacceptable amount. Request the distant transmitter to make a spread adjustment. The type and magnitude of adjustment necessary is explained in (1) through (3) below.

(1) If the steady reading is to the right (positive), the frequency spread is too great.

(2) If the steady meter reading is to the left (negative), the frequency spread is too small.

(3) Six times the steady meter reading is the departure in cps from the desired (850 cps) frequency spread.

47. Frequency Alarm Sensitivity Adjustment

The following procedure is for the purpose of adjusting the sensitivity of the frequency alarm-bell circuit:

a. Request the distant transmitter to transmit a steady mark signal.

b. Note the correct knob setting of the beat-frequency oscillator control in the radio bay. Both the radio receiver and distant radio transmitter are tuned properly if the procedure described in paragraph 46 has been followed.

c. Patch the D-C METER jack to the FREQ IND OUT jack. Use a cord equipped with three-conductor plugs.

d. Operate the AFC switch to the OFF position. Adjust the beat-frequency oscillator of the radio receiver to produce a reading of −50 on the frequency indicator meter.

e. Request the distant transmitter to transmit a test message.

f. Turn variable resistor OUT to the minimum position (counterclockwise) and then turn it slowly clockwise until the alarm bell starts to sound. Leave the resistor at this setting.

(1) If the bell does not ring at the maximum setting of variable resistor OUT, reset the beat-frequency oscillator to produce a reading of −80 on the frequency indicator meter.

(2) Repeat the procedure described in *f* above.

(3) If the bell still does not ring, refer to paragraph 85*i*.

g. Return the BFO control to its original setting (*b* above).

48. Receive Relay Test

The receive relays are type 255A polar relays. Test Set I–193–A, I–193–B, or I–193–C is required to test the receive relays. Test, and if necessary, adjust both receive relays before placing the AN/FGC–1(*) in operation. Use the test and adjustment procedures described in TM 11–2513. Remove the receive relays from the AN/FGC–1(*) as described in paragraph 98.

49. Signal Bias Measurement

Note. Measurement of the bias introduced by the AN/FGC–1 (*) or the loop will be made at the receiving end of the loop.

a. The procedure outlined in *c* through *j* below is for the purpose of measuring the bias of signals

received from the distant transmitter. This measurement can be made only when the following conditions are met:

(1) The signal-to-noise ratio of the received signal is adequate to prevent noise impulses from activating the receive relay.
(2) There is no selective fading of signals.
(3) There are no multiple-path delays.

b. Adjust the sensitivity of the detector panels as described in paragraph 44.

c. Operate the A-C D-C METER switch to the d-c position.

d. Patch between the D-C METER jack and the CURRENT REC REL jack of the receive relay in use. Use a patch cord equipped with three-conductor plugs.

e. Request the distant transmitter to send a steady mark signal. Note and record the indication on the meter when the mark signal is received.

f. Request the distant transmitter to send a steady space signal. Note and record the meter indication when the space signal is received.

g. Find one-half the algebraic sum of the meter indications obtained in *e* and *f* above. For example, if the indications obtained in *e* and *f* above were +60 and −80, the algebraic sum would be −20.

$$+60-80=-20$$

One-half the algebraic sum would be −10.

h. Request the distant transmitter to send reversals (dots). If a source of reversals is not available at the distant transmitter, request the distant transmitter to send alternate R and Y characters. The R and Y signals must be sent from a transmitter-distributor.

i. If reversals are received from the distant transmitter, use the method outlined in (1) through (3) below to determine the bias of transmitted signals. If alternate R and Y signals are received from the distant transmitter, refer to *j* below. If the bias exceeds permissible limits, request the distant transmitter to check the adjustment of the transmitter relay.

(1) Zero bias is indicated by a meter reading identical to the number obtained by the calculations in *g* above.
(2) A meter reading within ±2 of the number obtained by the calculations of *g* above indicated a permissible amount of bias. A meter reading outside these limits indicates excessive bias.

j. If alternate R and Y signals are received from the distant transmitter, use the method outlined in (1) and (2) below to determine the bias of transmitted signals.

(1) Algebraically, add 3 to the number obtained by the calculations in *g* above. For example, if the number obtained in *g* above was −10, the algebraic sum would be −7.

$$-10+3=-7$$

A meter reading equal to this sum is the zero-bias indication.

(2) A meter reading within ±2 of the zero-bias indication indicates a permissible amount of bias. A meter indication outside these limits indicates excessive bias.

Section III. CONTROLS AND INSTRUMENTS

50. Current Regulator CN–164/FGC–1 (Current Limiter Panel) Control

The following table names the current limiter control and tells what it does. Figures 6 and 7 show the control as viewed from the front of the panel.

Control	Function
Variable resistor OUT	Used to adjust current limiter output level (par. 43).

51. Trigger Amplifier AM–591/FGC–1 (Detector Panel) Controls and Their Use

The following table names the detector controls and tells what they do. Figures 9 and 10 show the controls as viewed from the front of the panel.

Control	Function
Variable resistor ADJ M REC GAIN.	Used to adjust the mark detector operating level (par. 44).
Variable resistor ADJ S REC GAIN.	Used to adjust the space detector operating level (par. 44).
ADJ REC GAIN switch (push button).	Places a 9-db pad in the circuit when operated.

52. Telegraph Repeater TH–11/FGC–1 (Receive Relay Panel) Controls and Their Use

The following table names the receive relay controls and tells what they do. Figure 12 shows the controls as viewed from the front of the panel.

Control	Function
1 TST switch	Used to open the holding circuit of receive relay 1.
2 TST switch	Used to open the holding circuit of receive relay 2.

53. Signal Data Converter CV–205/FGC–1 (Frequency Indicator Panel) Controls and Their Use

The following table names the frequency indicator panel controls and tells what they do. Figure 16 shows the controls as viewed from the front of the panel.

Control	Function
Variable resistor ZERO ADJ.	Used to calibrate the meter to read zero when a 2,125-cps signal is received from the radio receiver.
FREQ IND CAL switch (push button).	When depressed, provides reference voltage for calibration of meter to read zero when a 2,125-cps signal is received from the radio receiver.
Variable resistor OUT	Used to adjust sensitivity of the frequency alarm bell (par. 47).
METER D-C A-C switch	Arranges the meter for measurement of direct- or audio-frequency currents.

54. Receiver Control C–948/FGC–1 (Automatic Frequency Control Unit) Controls and Their Use

The following table names the automatic frequency controls and tells what they do. Figure 14 shows the controls as viewed from the front of the panel.

Control	Function
Variable resistor FREQ ADJ.	Used to adjust the automatic frequency control voltage to zero when a 2,125-cps signal is received (pars. 46 and 85*i*).
AFC DISCHG switch (push button).	Used to discharge capacitors which are across automatic frequency control voltage output.
AFC ON OFF	Normally in the ON position. Turns off automatic frequency control voltage when in the OFF position.

55. Power Supply PP–737/FGC–1 or PP–763/FGC–1 (Regulated Tube Rectifier X–61680B or X–61680C) Control and Its Use

The following table names the power supply control and tells what it does. Figure 24 shows the control as seen with the front cover of the power supply removed. This control is accessible through a hole in the cover when the cover is in place.

Control	Function
Variable resistor R	Used to adjust the +130-volt plate supply voltage.

Section IV. OPERATION UNDER USUAL CONDITIONS

56. Preliminary Starting and Stopping Procedures

Before placing the equipment in initial operation, perform the preoperational tests and adjustments described in paragraphs 39 through 49. Remove all dummy plugs and patch cords after completing the tests. These tests and adjustments will be repeated at the intervals indicated in the preventive maintenance checklist (par. 67). No other preliminary starting or stopping procedure is necessary.

57. Starting Procedure

Follow the starting procedure of the equipment performance checklist (par. 75). Observe the equipment during the starting procedure to determine whether the equipment is functioning normally as described in the normal indications column of the equipment performance checklist.

58. Types of Operation

a. The AN/FGC–1(*) may be used to supply either polar or neutral signals to the loop. The

wiring changes necessary to convert the output from polar signals to neutral signals are described in paragraph 34.

b. The AN/FGC–1(*) may be used with either low-frequency or high-frequency radios. The changes necessary to adapt the AN/FGC–1(*) to operation with low-frequency radios are described in paragraph 35.

59. Stopping Procedure

a. When Used With Diversity Receiving Equipments AN/FRR–3 or AN/FRR–3A.

(1) To place the AN/FGC–1(*) in stand-by condition, operate the 1 TST switch to the horizontal position. Operate the DIAL—OPER—SEND switch on the radio receiver to the SEND position, and return it to OPER position.

(2) To disconnect the power from the AN/FGC–1(*), operate the DIAL—OPER—SEND switch on the radio receiver to the DIAL position and dial 02 on the remote control dial on the radio receiver.

b. When Used With Other Radio Receivers.

(1) The AN/FGC–1(*) cannot be placed in stand-by condition when radio receivers other than the AN/FRR–3 or AN/FRR–3A are used.

(2) To disconnect power from the AN/FGC–1(*), remove the plug from the RECTIFIER receptacle. This will remove power from all panels except Terminal Box J–447/FGC–1 (outlet and heater panel). To remove all power from the AN/FGC–1(*), remove the main power plug from its receptacle.

Section V. OPERATION UNDER UNUSUAL CONDITIONS

60. General

It may be necessary to operate Radioteletype Terminal Equipment AN/FGC–1(*) in regions where extreme cold, heat, humidity, moisture, sand conditions, etc., prevail. Paragraphs 61 through 63 contain instructions for minimizing the effects of these unusual operating conditions.

61. Operation in Arctic Climates

Subzero temperatures and climatic conditions associated with cold weather affect the efficient operation of the AN/FGC–1(*). The following are instructions and precautions for operation under such adverse conditions:

a. Handle the equipment carefully.

b. Keep the AN/FGC–1(*) warm and dry. If the equipment is not within a heated inclosure, construct an insulated box for the equipment. Keep the filaments of the vacuum tubes lighted constantly.

c. Locate the equipment inside a heated inclosure where there is no danger of a cold draft striking the glass tubes when a door is opened. A sudden draft of cold air often is sufficient to shatter the glass envelope of a heated tube. If the inclosure is so constructed that this precaution is impossible, place a blanket or some other barrier between the source of the draft and the equipment.

d. When the equipment which has been exposed to the cold is brought into a warm room, it will sweat until it reaches room temperature. When the equipment has reached room temperature, dry it thoroughly. This condition may arise also when the equipment warms up during the day after exposure during a cold night.

62. Operation in Tropical Climates

When operated in tropical climates, the equipment may be installed in tents, huts, or when necessary, in underground dugouts. When equipment is installed below ground and when it is set up in swampy areas, moisture conditions are more acute than those normally encountered in the tropics. Ventilation is usually very poor, and the high relative humidity may cause condensation of moisture on the equipment whenever the temperature of the equipment becomes lower than the ambient air. To minimize this condition, keep the HEAT lamps lighted whenever the equipment is not in operation.

63. Operation in Desert Climates

a. Conditions similar to those encountered in tropical climates often prevail in desert areas. Use the same measures to insure proper operation of the equipment.

b. The main problem which arises with equip-

ment operation in desert areas is the large amount of sand, dust, and dirt which enters the moving parts of the equipment. The ideal preventive precaution is to house the equipment in a dustproof shelter. Since, however, such a building is seldom available and would require air conditioning, the next best precaution is to make the building in which the equipment is located as dustproof as possible. Hang wet sacking over the windows and doors. Cover the inside walls with heavy paper. Secure the outside walls of tents with sand to prevent their flapping in the wind.

c. Never tie power cords or other wiring connections to either the inside or the outside of tents. Desert areas are subject to sudden wind squalls which may jerk the connections loose or break the lines.

d. Keep the equipment as free from dust as possible. Make frequent preventive maintenance checks (par. 67).

CHAPTER 3

ORGANIZATIONAL MAINTENANCE INSTRUCTIONS

Section I. PREVENTIVE MAINTENANCE SERVICES

64. Definition of Preventive Maintenance

Preventive maintenance is the work performed on equipment (usually when the equipment is not in use) to keep it in good working condition so that breakdowns and needless interruptions in service will be kept to a minimum. Preventive maintenance differs from trouble shooting and repair since its object is to prevent certain troubles from occurring (AR 750–5).

65. Tools and Materials Supplied with AN/FGC–1(*)

Organizational tools and materials issued for use with the AN/FGC–1(*) are listed in SIG 7 & 8–AN/FGC–1. No special tools are supplied with the equipment.

66. General Preventive Maintenance Techniques

a. Use No. 0000 sandpaper to remove corrosion.

b. Use a clean, dry, lint-free cloth or a dry brush for cleaning.

(1) If necessary, except for electrical contacts, moisten the cloth or brush with solvent, dry-cleaning (SD); then wipe the parts dry with a cloth.

(2) Clean electrical contacts with a cloth moistened with carbon tetrachloride; then wipe them dry with a dry cloth.

Caution: Repeated contact of carbon tetrachloride with the skin or prolonged breathing of the fumes is dangerous. Make sure adequate ventilation is provided.

c. If available, dry compressed air may be used at a line pressure not exceeding 60 psi (pounds per square inch) to remove dust from inaccessible places; be careful, however, or mechanical damage may result from the air blast.

d. For further information on preventive maintenance techniques refer to TB SIG 123 and TB SIG 178.

Note. No lubrication is necessary for the AN/FGC–1(*).

67. Preventive Maintenance Checklist

The preventive maintenance operations listed in the preventive maintenance checklist below should be performed by organizational personnel at the intervals indicated, unless these intervals are reduced by the local commander.

Caution: Screws, bolts, and nuts should not be tightened carelessly. Fittings tightened beyond the pressure for which they are designed will be damaged or broken.

Item No.	What to check	When to check [a]	Procedure	Precautions
1	Exterior and interior of cabinet	D	Wipe with a dry, lint-free cloth	Disconnect all power from the AN/FGC–1 (*) before cleaning the inside of the cabinet.
2	Filter capacitors	W	Inspect power supply electrolytic capacitors for leakage, bulging, and overheating.	Disconnect power and discharge capacitors before touching them.
3	Plugs	W	Polish until bright. Wipe off polish with a clean cloth.	

[a] D—Daily; W—Weekly; M—Monthly.

Item No.	What to check	When to check [a]	Procedure	Precautions
4	Power cord and plug, loop wires, and wires connecting the AN/FGC–1 (*) to radio bay.	W	Inspect for damaged insulation. Look for improper connections which strain the wires or connections. Wipe the power cord, plug, and socket with a dry, clean cloth.	
5	Grasshopper fuses on fuse panel	W	Inspect to see that the fuses are positioned properly so that contact will be made and the fuse alarm will sound when a fuse operates.	Disconnect power before touching fuses.
6	Fuse AC1 and AC2 in power supply.	W	Inspect fuse cap and fuse ends for burning, charring and corrosion. Check fuseholder for cleanliness and foreign matter. Brush away all dust and dirt.	
7	Meter	W	See paragraph 40.	
8	Power supply operating voltage	W	See paragraph 41.	
9	Disk rectifier operating voltage	W	See paragraph 42.	
10	Detector sensitivity	W	See paragraph 44.	
11	Frequency indicator calibration	W	See paragraph 45.	
12	Automatic frequency control unit adjustment.	W	See paragraph 46.	
13	Over-all bias	W	See paragraph 49.	
14	Current limiters	M	See paragraph 43.	
15	Noise suppression circuit	M	See paragraph 116*b*.	
16	Polar relays	M	See paragraph 48.	
17	Adjustment of frequency alarm sensitivity.	M	See paragraph 47.	
18	Electron tubes in use	M	Test tubes in tube tester and replace if necessary.	Remove tubes from sockets in accordance with instructions in paragraph 98.

[a] D—Daily; W—Weekly; M—Monthly.

68. Preventive Maintenance Checklist Forms

a. General. This information is presented as a guide to the individual making an inspection of the AN/FGC–1 (*) in accordance with instructions in DA AGO Forms 11–238 and 11–239 (par. 2). The decision as to which items on the forms are applicable to this equipment is a tactical decision to be made in the case of First Echelon Maintenance by the Communication Officer/Chief or his designated representatives, and in the case of Second and Third Echelon Maintenance by the individual making the inspection. Instructions for the use of each form appear on the reverse side of the form. It is required that the forms be completed by personnel using this equipment. This manual contains preventive maintenance information that will aid in completing the forms. The relation of the instructions in this manual to the item numbers of the forms is given in *b* and *c* below.

b. DA AGO Form 11-238 Operator First Echelon Maintenance Checklist for Signal Corps Equipment—Radio Communication, Direction Finding, Carrier, Radar.

Form 11–238 item No.	Paragraph reference (this manual)
1	7.
3	66.
6	75.
8	66, 70.
9	27 through 35, 67.
11	28 through 31.
12	50 through 55.
15	40*d*, 106, 115.
16	69.

c. DA AGO Form 11–239, Second and Third Echelon Maintenance Checklist for Signal Corps Equipment—Radio Communication, Direction Finding, Carrier, Radar.

Form 11–239 item No.	Paragraph reference (this manual)
1	7.
3	66.
4	98, 103.
6	75.
8	66, 70.
9	27 through 35, 67.
11	28 through 31.
12	50 through 55.
15	40*d*, 106, 115.
16	69.
19	98.
21	37*a*(5), 37*b*(4).
22	49.
24	66.
25	37*b*(4).
26	27.
27	113.
28	49, 111.
31	66.
32	66.
37	69*b*.

Section II. WEATHERPROOFING

69. Weatherproofing

a. General. Signal Corps equipment, when operated under severe climatic conditions, such as prevail in tropical, arctic, and desert regions, requires special treatment and maintenance. Fungus growth, insects, dust, corrosion, salt spray, excessive moisture, and extreme temperatures are harmful to most materials.

b. Tropical Maintenance. A special moisture-proofing and fungiproofing treatment has been devised, which, if properly applied, provides a reasonable degree of protection. This treatment is fully explained in TB SIG 13 and TB SIG 72.

c. Winter Maintenance. Special precautions necessary to prevent poor performance or total operational failure of equipment in extremely low temperatures are fully explained in TB SIG 66.

d. Desert Maintenance. Special precautions necessary to prevent equipment failure in areas subject to extremely high temperatures, low humidity, and excessive sand and dust are fully explained in TB SIG 75.

70. Rustproofing and Painting

a. When the finish on the cabinet or panels has been scarred or damaged badly, rust and corrosion can be prevented by touching up bared surfaces. Use No. 000 or No. 0000 sandpaper to clean the surface down to the bare metal; obtain a bright smooth finish.

Caution: Do not use steel wool. Minute particles enter the panel wiring and cause internal shorting or grounding of circuits.

b. When a touch-up job is necessary, remove rust from the equipment by cleaning with solvent (SD). In severe cases, it may be necessary to use sandpaper to complete the preparation for painting. Apply paint with a small brush. Paint to be used will be authorized in accordance with existing regulations.

Section III. TROUBLE SHOOTING AT ORGANIZATIONAL MAINTENANCE LEVEL

71. General

The trouble shooting and repair work that can be performed at the organization maintenance level (operators and repairmen) is limited in scope by the tools, test equipment, and replaceable parts issued and by the existing tactical situation. Accordingly, trouble shooting is based on the performance of the equipment.

72. Visual Inspection

When operational failure is encountered and the cause is not immediately apparent, check the items

listed below before starting a detailed examination of the equipment. Failure of the AN/FGC–1 (*) usually is caused by one or more of the following faults:

a. Defective tubes.
b. Operated fuses.
c. Improper patches.

73. Sectionalizing Troubles

After it has been established that trouble exists in the AN/FGC–1 (*) (by use of the equipment performance checklist (par. 75) or by other means), the first step in trouble shooting is to sectionalize the fault to one of the components.

a. If the fault is indicated by an operated fuse, the panel marking for the operated fuse indicates the component at fault.

b. If the fault is indicated by poor copy, the fault may be isolated to channel A or to channel B by disabling the channels alternately and observing copy quality. If copy quality improves with a channel disabled, the fault is in the disabled channel. To disable a channel, insert open-circuit (dummy) plugs in the CURR LIM OUT, DETECTOR OUT M, and DETECTOR OUT S jacks of the channel to be disabled.

c. The fault may be further sectionalized to a particular component by cross-patching or frogging. This process consists of transferring the channel A signal to channel B and the channel B signal to channel A within the AN/FGC–1 (*) by means of patching. If the fault changes from one channel to the other when components are frogged, the fault is before the frogged point. If the fault does not change from one channel to the other, the fault is after the frogged point or is in a part of the equipment common to both channels (receive relay panel). The table below lists the points at which frogging patches may be made and the jacks which are used. Note that a frogging patch always connects a point in channel A to a point in channel B and a point in channel B to a point in channel A.

Frogging point	Patch	
	From jacks (channels A and B)	To jacks (channels B and A)
Current limiter input	IMP FILT OUT	CURR LIM IN.
Current limiter output	CURR LIM OUT	PAD IN.
Radio receiver output	RAD REC OUT	IMP FILT IN.
Mark filter output	M CH F OUT	M DET IN.
Space filter output	S CH F OUT	S DET IN.

d. When it is suspected that a particular component is at fault, disable the faulty channel (*b* above) and observe the quality of copy. The copy should be good. Patch the suspected component in place of the good component. If the trouble reappears, the suspected component is at fault. Refer to the trouble shooting chart, paragraph 109.

e. If a test board is provided, components from a different bay may be patched in place of the suspected component. The procedure is described in paragraph 112.

74. Trouble Shooting (Using Equipment Performance Checklist)

a. General. The equipment performance checklist (par. 75) will help to locate trouble in the equipment. The list gives the item to be checked, the normal indications of current operation, and the corrective action that can be taken by the operator. *To use this list, follow the items in numerical sequence.*

b. Action or Condition. For some items, the information given in the *Action or condition* column consists of various switch and control settings under which the item is to be checked. For other items, it represents an action that must be taken to check the normal indication given in the *Normal indications* column.

c. Normal Indications. The normal indications listed include the visible and audible signs that the operator should perceive when the items are checked. If the indications are not normal, the operator should apply the recommended corrective measures.

d. Corrective Measures. The corrective measures listed are those which the operator can make

without turning in the equipment for repairs. A reference in the table to chapter 5 indicates that trouble shooting by an experienced repairman is necessary. If the AN/FGC–1(*) is completely inoperative or if the recommended corrective measures do not yield results, trouble shooting is necessary. However, if the tactical situation requires that communication be maintained and if the AN/FGC–1(*) is not completely inoperative, the operator must keep the equipment in operation as long as it is possible to do so.

75. Equipment Performance Checklist

Different methods are used to apply power to the AN/FGC–1(*) and to remove power from the AN/FGC–1(*) when radio receivers of different types are used (par. 4). Subparagraph *a* below contains an equipment performance checklist for the AN/FGC–1(*) when used with AN/FRR–3 or AN/FRR–3A radio receivers. An equipment performance checklist for the AN/FGC–1(*) when used with other radio receivers is contained in *b* below.

a. Equipment Performance Checklist for the AN/FGC–1(*) When Used With AN/FRR–3 or AN/FRR–3A Radio Receivers.

	Item No.	Item	Action or condition	Normal indications	Corrective measures
PREPARATORY	1	Main power switch in radio receiver.	Operate to OFF position.		
	2	Dummy plugs and patch cords.	Remove all dummy plugs and patch cords.		
START	3	Main power switch in AN/FRR–3 or AN/FRR–3A.	Operate to ON position.	HEAT lamps light	Check HEAT lamps. Check 4-conductor power cord and plug.
	4	DIAL—OPER—SEND lever switch and remote control dial, on AN/FRR–3 or AN/FRR–3A.	Operate and hold lever switch to DIAL position. Dial 01 with the remote control dial.	HEAT lamps are extinguished.	Check wiring of 4-conductor cord and plug (fig. 60).
				All tube filaments heat up.	Test tubes and filament voltages of tubes that do not heat.
				After 15 seconds, power supply tubes glow (blue).	If one tube does not glow, check it by substituting a new tube (par. 98). If neither tube glows, ascertain whether the power supply cover switch SW1 is operated. Check fuses AC1 and AC2; check timer TD (pars. 92 and 93).

	Item No.	Item	Action or condition	Normal indications	Corrective measures
EQUIPMENT PERFORMANCE	5	Received copy	Obtain test message from distant transmitter. (Printer must be in series with loop for this test.)	Received copy is accurate.	If the received copy is garbled, perform the preoperational tests (pars. 41 through 49). If no copy is received, plug a headset into the MON jack. If signals are received from the radio receiver, tones will appear in the headset. Tones indicate trouble in the AN/FGC–1(*) circuit (par. 73). No tone indicates signal is not applied to the AN/FGC–1(*). Check the loop for open, short, ground, foreign battery, and excessive loop resistance.
	6	1 TST switch	Operate the 1 TST switch to horizontal position. Depress lever switch of the radio receiver to SEND position and return it to the OPER position.	AN/FGC–1(*) in standby condition. Monitor circuit relays A, B, and C close. Relay REC held in space condition.	Check shielded pair between AN/FGC–1 DISABLING terminal of radio receiver and bay terminal board (par. 32). Check the monitor circuit (par. 83*c*).
STOP	7	DIAL—OPER—SEND lever switch and remote control dial, on AN/FRR–3 or AN/FRR–3A.	Operate and hold lever switch to DIAL position. Dial 02 with the remote control dial.	HEAT lamps light. The only power present in the AN/FGC–1(*) is in the APPLIANCE outlet and the HEAT lamps. The tubes become cool, and the rectifier tubes cease to glow.	Check HEAT lamps. Check wiring of 4-conductor cord and plug (fig. 60).
	8	Main power switch on AN/FRR–3 or AN/FRR–3A.	Operate to OFF position.	HEAT lamps extinguished. All power is removed from the AN/FGC–1(*).	

b. Equipment Performance Checklist for the AN/FGC–1(*) When Used With Other Radio Receivers.

	Item No.	Item	Action or condition	Normal indications	Corrective measures
PREPARATORY	1	Main power plug	Remove plug from power receptacle.		
	2	Rectifier power plug	Remove rectifier power plug from RECTIFIER receptacle.		
	3	Dummy plugs and patch cords.	Remove all dummy plugs and patch cords.		

	Item No.	Item	Action or condition	Normal indications	Corrective measures
START	4	Main power plug	Insert main power plug into power receptacle.	HEAT lamps light.	Check HEAT lamps. Check wiring changes made in installation of two-conductor power cord (par. 33*b*).
				After 15 seconds, power supply tubes glow (blue).	Check rectifier power plug. If one tube does not glow, check it by substituting a new tube (par. 98). If neither tube glows, ascertain whether power supply cover switch SW1 is operated. Check fuses AC1 and AC2; check timer TD (pars. 92 and 93).
EQUIPMENT PERFORMANCE	5	Received copy	Obtain test message from distant transmitter. (Printer must be in series with the loop for this test.)	Received copy is accurate.	If the received copy is garbled, perform the preoperational tests (pars. 41 through 49). If no copy is received, plug a headset into the MON jack. If copy received from the radio receiver, tones will appear in the headset. Tones indicate trouble in the AN/FGC–1(*) circuit (par. 73). No tone indicates signal in not applied to the AN/FGC–1(*). Check the loop for open, short, ground, foreign battery, and excessive loop resistance.
STOP	6	Rectifier power plug	Remove rectifier power plug from RECTIFIER receptacle.	Heat lamps remain lighted. The only power in the AN/FGC–1(*) is in the HEAT lamps and APPLIANCE outlets. The tubes become cool and the rectifier tubes cease to glow.	Check the HEAT lamps if they are not lighted.
	7	Main power	Remove the main power plug from the power receptacle.	All power is removed from the AN/FGC–1(*) bay. HEAT lamps are extinguished.	

CHAPTER 4
THEORY

76. General

a. Radioteletype Terminal Equipment AN/FGC–1(*) accepts 2,125- and 2,975-cps signals from the associated radio receivers (par. 4) and converts these signals to d-c signals. These d-c signals represent teletypewriter-code mark and space pulses, and are used to operate receiving teletypewriter equipment. The 2,125-cps signals are converted to teletypewriter mark pulses, and the 2,975-cps signals are converted to space pulses by the AN/FGC–1(*) equipment.

b. Radioteletype Terminal Equipment AN/FGC–1(*) is not used in the *transmission* of messages in a radio teletypewriter system. The transmitting teletypewriter equipment is connected to the radio transmitter through an exciter unit such as Exciter Unit O–5/FR.

c. To reduce fading when high-frequency radios are used, the AN/FGC–1(*) receives the same signals from two radio receivers arranged in space diversity. The signals received from the separate radio receivers are processed in separate, identical channels, designated channel B and channel A (fig. 28). After processing, the channel B and channel A output d-c signals are combined to operate the receive relay (REC RELAY) which controls the current flow in the loop. Since Channel B and Channel A are identical, only one channel will be discussed.

d. When the AN/FGC–1(*) is used with a low-frequency radio, fading is not serious enough to require space diversity reception. A single radio receiver is used, and one channel of the AN/FGC–1(*) is used to process the signal. The other channel of the AN/FGC–1(*) is disabled (par. 73*b*).

e. The components (panels) of the AN/FGC–1(*) have three general functions: signal processing, equipment performance control, and power supply. These functions are explained in paragraphs 77, 78, and 79.

77. Signal Processing

a. Signals received from a radio receiver are applied to the AN/FGC–1(*) through an input filter (fig. 28). The input filter passes a narrow band of frequencies which includes the mark and space frequencies (pars. 76*a* and 80) and attenuates all other frequencies.

b. The current limiter (fig. 28) accepts signals passed by the input filter and limits these signals in such a manner that the current limiter delivers a constant output for wide variations of input level. The current limiter is discussed in detail in paragraph 81.

c. The limited mark and space frequency signals from the current limiter are separated by the mark channel filter (M CH FILT) and space channel filter (S CH FILT) (fig. 28). After separation, the mark and space frequencies are rectified in separate detectors (fig. 28) and are filtered. The equipment mounted on the detector panels is discussed in paragraph 82.

d. After detection, the d-c mark currents from both channel B and channel A are combined to operate the receive relay (REC RELAY, fig. 28) to the mark condition. Similarly, the space currents from both channels are combined to operate the receive relay to the space condition. The receive relay is a polar relay that controls the current flow in the loop. The receive relay circuit is discussed in paragraph 83.

78. Equipment Performance Control

a. A noise suppression circuit (fig. 28), mounted on the detector panels, decreases the operating current supplied to the REC RELAY from one channel if the signal-to-noise ratio in that channel decreases. At the same time, the noise suppression circuit increases the relay current from the channel with the more favorable signal-to-noise ratio.

b. The automatic frequency control circuit (fig. 28) is common to both channels. It functions to maintain the mark frequency received from the radio receiver within 50 cps of 2,125 cps. The output of the automatic frequency control circuit is a dc used to control the frequency of the beat-frequency oscillator in the radio receiver.

c. A frequency indicator circuit (fig. 28) is

included in the AN/FGC–1(*) equipment. When the frequency indicator circuit is used with the associated meter circuit, frequency measurements may be made. A test frequency of 2,550 cps is provided which may be patched to the other circuits for testing and adjusting these circuits. An audible alarm circuit indicates any input frequency deviation beyond the permissible limits. The frequency indicator circuit is discussed in detail in paragraph 86.

d. A jack strip and jack fields on the various panels provide means for patching the signal to the frequency indicator panel for test purposes and for patching in the spare receive relay circuit. The jack strip is discussed in paragraph 88.

e. All fuses except the power supply a-c fuses are mounted on a fuse panel. The fuse panel is discussed in paragraph 87.

f. The alarm and miscellaneous panel contains two audible alarms: a bell to indicate variations in input-signal frequency, and a buzzer to indicate a blown fuse. The alarm and miscellaneous panel is discussed in paragraph 96.

g. The heater and outlet panel contains receptacles for heaters, convenience outlets for electrical appliances, and receptacles for the a-c input to the power supplies. The heater and outlet panel is discussed in paragraph 95.

79. Power Supply

a. All a-c heater currents and all 130-volt direct currents may be furnished by either Power Supply PP–737/FGC–1 or PP–763/FGC–1X (formerly known as regulated tube rectifiers X61680B and X61680C, respectively). These power supplies operate from either 103 to 127 volts or 207 to 253 volts ac. The PP–737/FGC–1 operates from a 50- to 60-cps power source, and the PP–763/FGC–1X operates from a 25- to 60-cps power source. The 130-volt d-c outputs are derived from two gas-filled (thyratron) tubes arranged as a full-wave rectifier. Power Supplies PP–737/FGC–1 and PP–763/FGC–1X are discussed in detail in paragraphs 89 through 93.

b. A disk-type full-wave rectifier, instead of Power Supply PP–737/FGC–1 or PP–763/FGC–1X, may be used to supply the 130 volts dc to the receiving loop. In this arrangement Power Supply PP–737/FGC–1 or PP–763/FGC–1X is used to supply a-c heater currents and 130 volts dc (regulated) for plate and screen potentials. The disk-type rectifier is discussed in paragraph 94.

80. Input Filter

The input filter (figs. 29 and 32) passes a band of about 1,600 cps to 3,600 cps with negligible

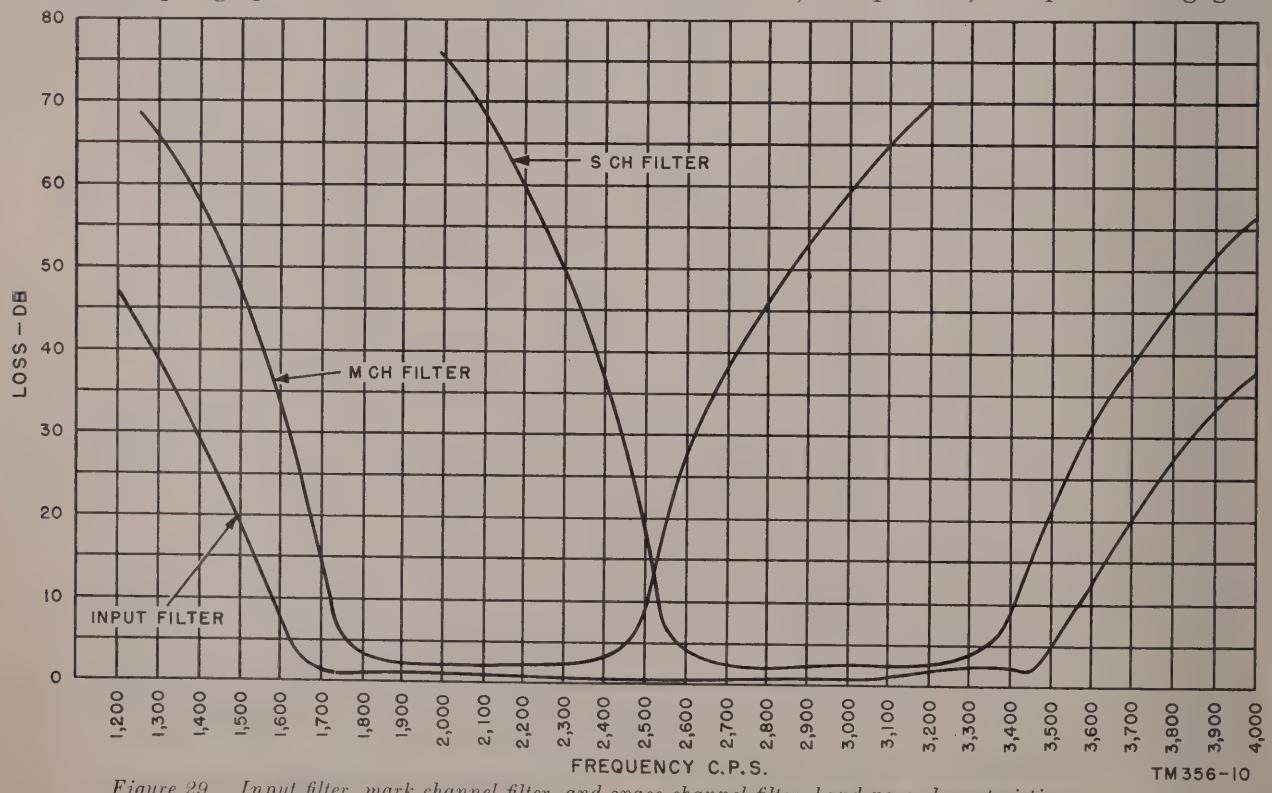

Figure 29. Input filter, mark channel filter, and space channel filter, band-pass characteristics.

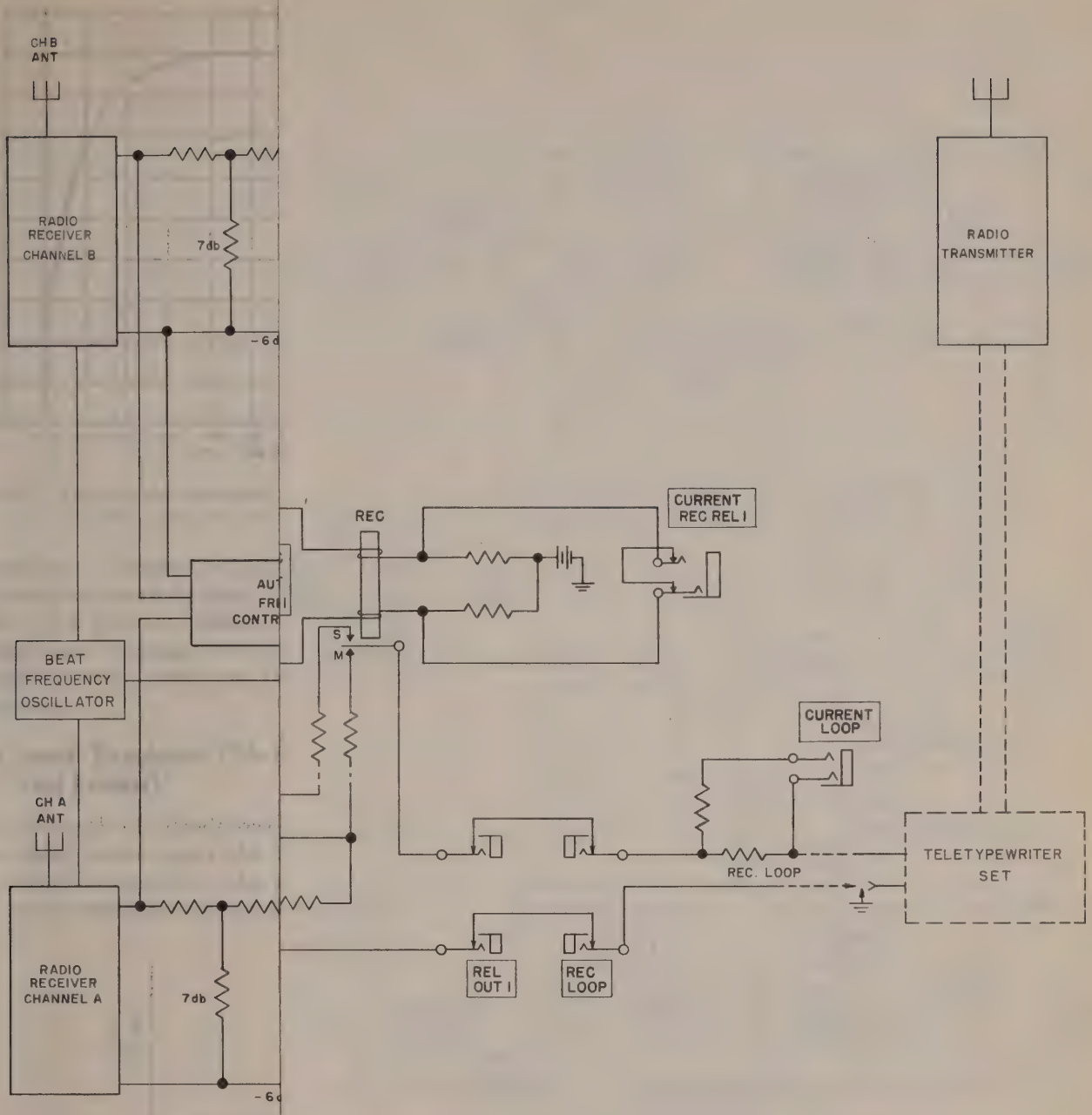
CH B ANT
RADIO RECEIVER CHANNEL B
7db
-6d
RADIO TRANSMITTER
REC
CURRENT REC REL I
AU FRI CONTR
S
M
BEAT FREQUENCY OSCILLATOR
CURRENT LOOP
CH A ANT
TELETYPEWRITER SET
REC. LOOP
RADIO RECEIVER CHANNEL A
7db
-6d
REL OUT I
REC LOOP

TM 356-44

included in the AN/FGC–1(*) equipment. When the frequency indicator circuit is used with the associated meter circuit, frequency measurements may be made. A test frequency of 2,550 cps is provided which may be patched to the other circuits for testing and adjusting these circuits. An audible alarm circuit indicates any input frequency deviation beyond the permissible limits. The frequency indicator circuit is discussed in detail in paragraph 86.

d. A jack strip and jack fields on the various panels provide means for patching the signal to the frequency indicator panel for test purposes and for patching in the spare receive relay circuit. The jack strip is discussed in paragraph 88.

e. All fuses except the power supply a-c fuses are mounted on a fuse panel. The fuse panel is discussed in paragraph 87.

f. The alarm and miscellaneous panel contains two audible alarms: a bell to indicate variations in input-signal frequency, and a buzzer to indicate a blown fuse. The alarm and miscellaneous panel is discussed in paragraph 96.

g. The heater and outlet panel contains receptacles for heaters, convenience outlets for electrical appliances, and receptacles for the a-c input to the power supplies. The heater and outlet panel is discussed in paragraph 95.

79. Power Supply

a. All a-c heater currents and all 130-volt direct currents may be furnished by either Power Supply PP–737/FGC–1 or PP–763/FGC–1X (formerly known as regulated tube rectifiers X61680B and X61680C, respectively). These power supplies operate from either 103 to 127 volts or 207 to 253 volts ac. The PP–737/FGC–1 operates from a 50- to 60-cps power source, and the PP–763/FGC–1X operates from a 25- to 60-cps power source. The 130-volt d-c outputs are derived from two gas-filled (thyratron) tubes arranged as a full-wave rectifier. Power Supplies PP–737/FGC–1 and PP–763/FGC–1X are discussed in detail in paragraphs 89 through 93.

b. A disk-type full-wave rectifier, instead of Power Supply PP–737/FGC–1 or PP–763/FGC–1X, may be used to supply the 130 volts dc to the receiving loop. In this arrangement Power Supply PP–737/FGC–1 or PP–763/FGC–1X is used to supply a-c heater currents and 130 volts dc (regulated) for plate and screen potentials. The disk-type rectifier is discussed in paragraph 94.

80. Input Filter

The input filter (figs. 29 and 32) passes a band of about 1,600 cps to 3,600 cps with negligible

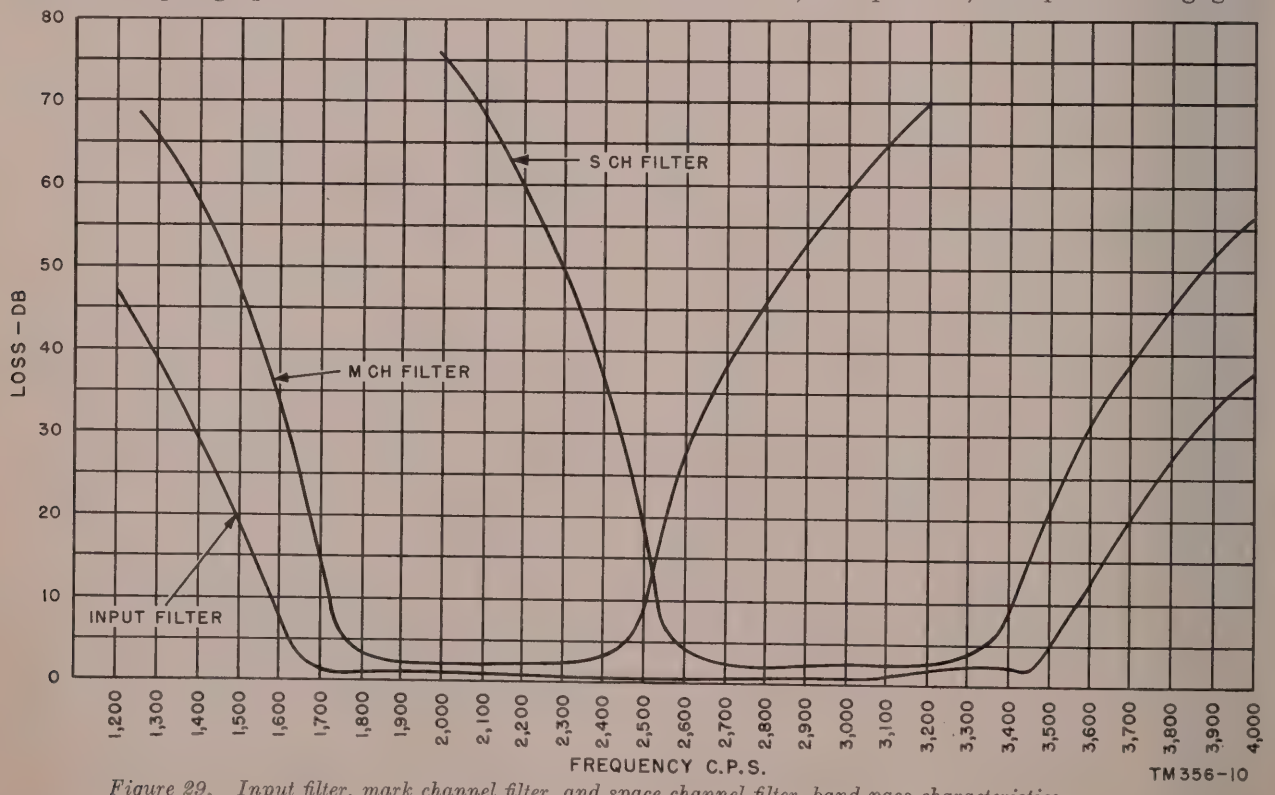

Figure 29. Input filter, mark channel filter, and space channel filter, band-pass characteristics.

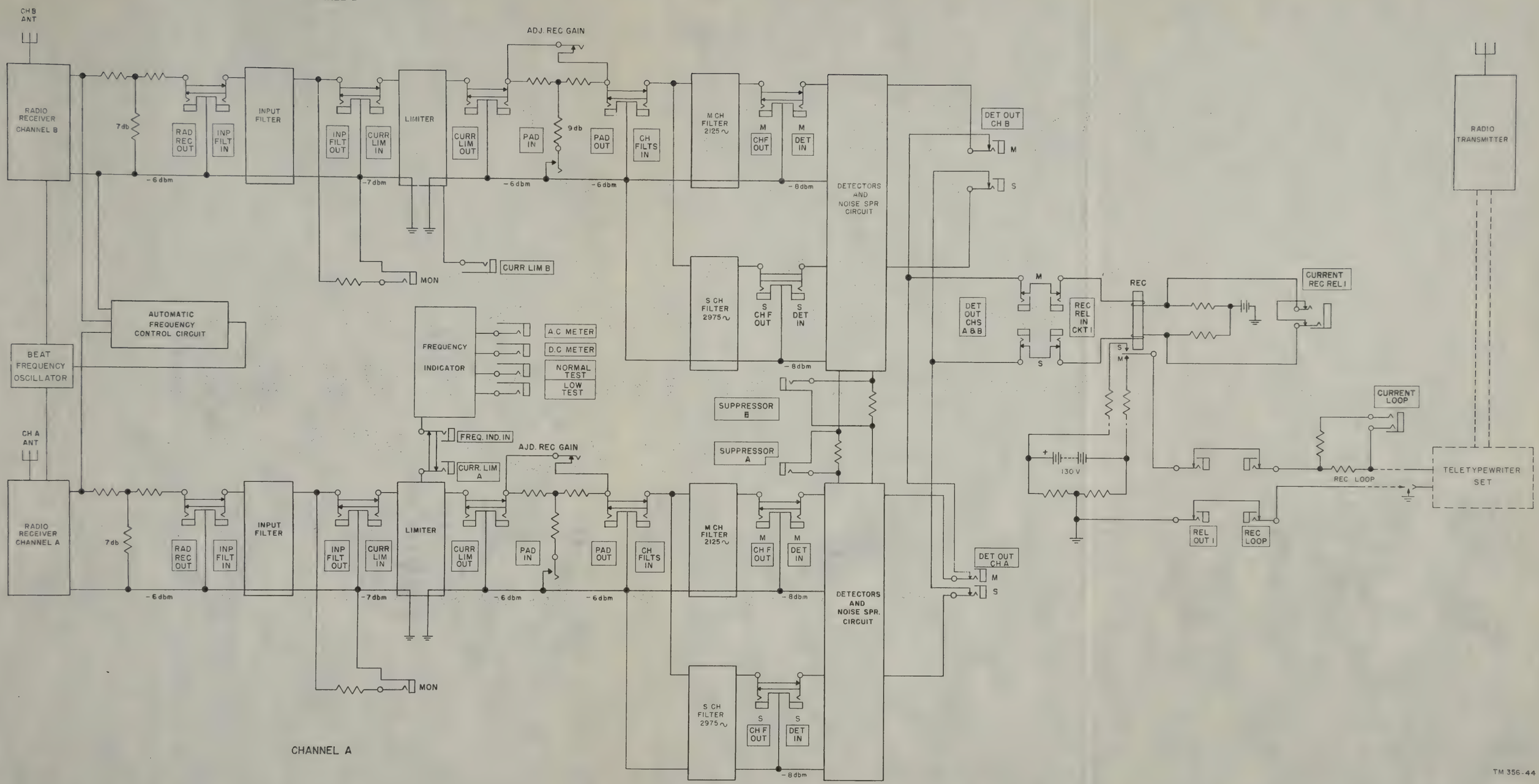

FIGURE 28.—*Radioteletype Terminal Equipment AN/FGC–1(*), simplified block diagram.*

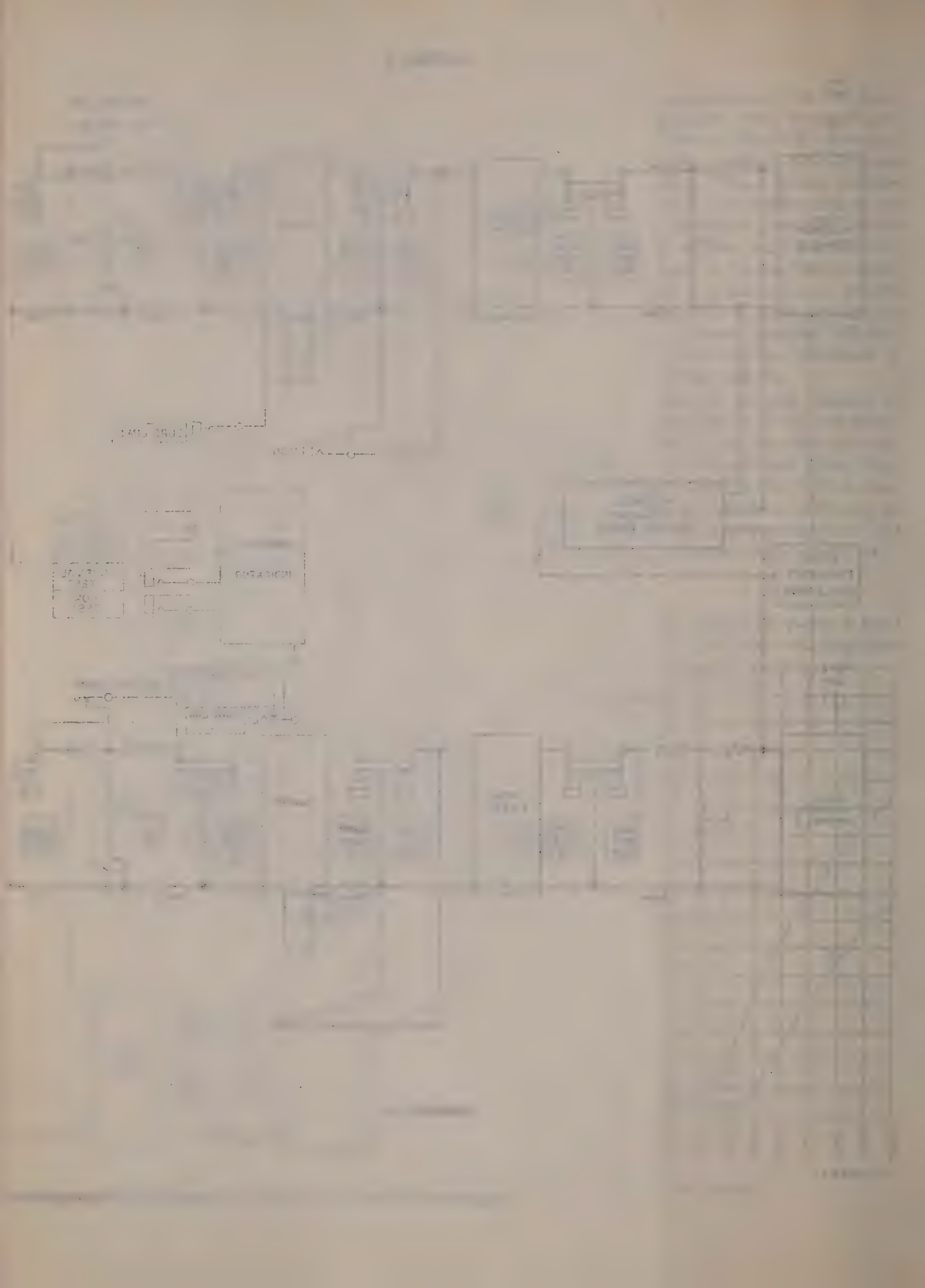

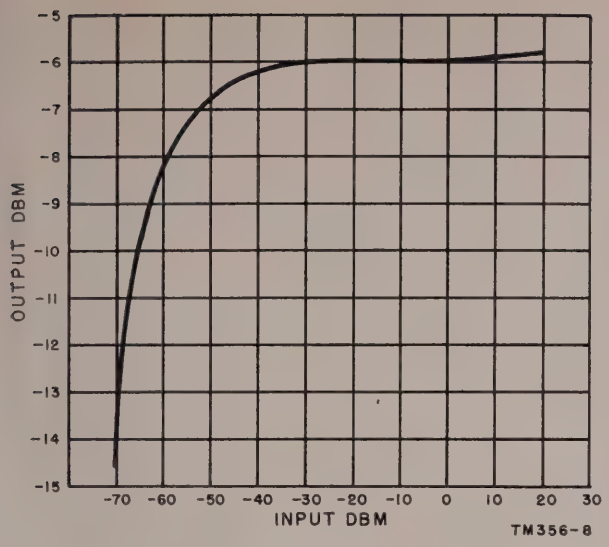

Figure 30. Input-output signal-level characteristics of Current Regulator CN–164/FGC–1.

attenuation. Frequencies outside this band are attenuated as shown in figure 29. The pass band of the input filter is sufficient to pass both the marking and spacing frequencies when these frequencies vary ±300 cps from their nominal frequencies.

81. Current Regulator CN–164/FGC–1 (Current Limiter)

The strength of signals received over a short-wave radio varies many db because of fading. This effect is reduced by the current limiter circuit. Wide variations of input-signal level to the current limiter circuit appear as constant level output from this circuit. A graph showing the relationship between input and output signal levels appears in figure 30.

a. Signals passed by the input filter (figs. 7, 29, and 32) are coupled to the grid of the first tube of the current limiter circuit by input transformer IN through 510 K ohm resistor AC. The first tube of the current limiter, designated IN, functions as a limiter except for extremely low-level signals. Normal signal level at the grid of tube IN is −7 dbm. Tube IN clips the positive peaks of any signal which exceeds −25 dbm and clips the negative peaks of any signal which exceeds −19 dbm (fig. 31). Tube IN amplifies signals of less than −25 dbm. The output voltage of tube IN (fig. 32) is developed across resistor AE. Resistor AF is a voltage-dropping resistor. Resistor AB provides cathode bias, and capacitor AA is the cathode bypass capacitor. Capacitor AB is the screen bypass capacitor, and resistor AD the screen-grid voltage-dropping resistor. Capacitor AK couples the signal from the output of tube IN to tube LIM control grid through a low-pass filter consisting of resistor H, retardation coil A, and capacitor E.

b. The output of tube IN is applied to the control grid of limiter tube LIM through reactor A and 2-megohm resistor J. When the control grid becomes positive, the voltage drop across resistor J is sufficient to limit the grid potential to a value only slightly positive with respect to the cathode. This action imposes a definite

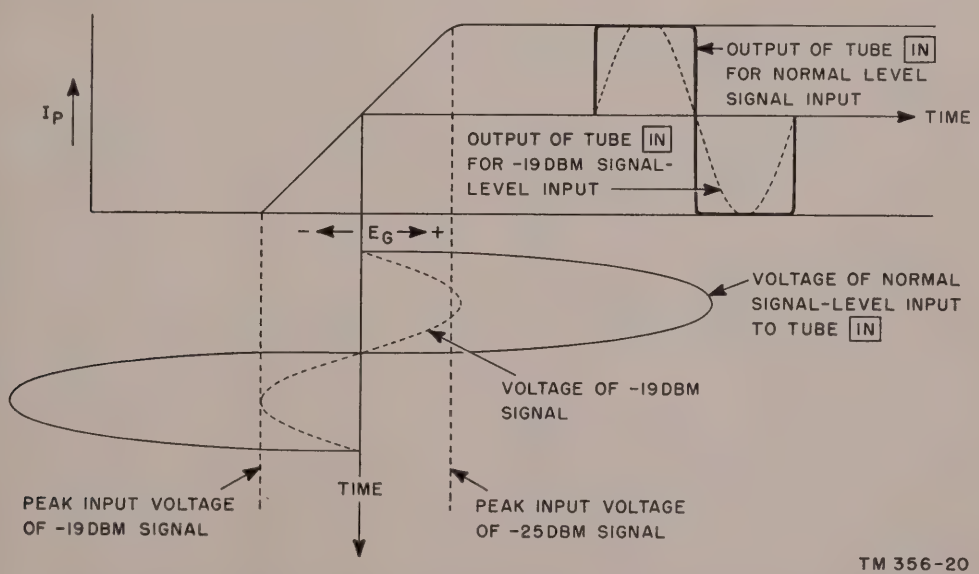

Figure 31. Typical grid voltage-plate current relationship for tube IN when normal or low level signals are applied.

upper limit on the positive portion of the signal. The negative portion of the signal is limited by the cutoff of the tube characteristic. Tube LIM clips the positive portion of signals which exceed −37 dbm and clips the negative portion of signals which exceed −66 dbm. The output of tube LIM is a square wave. The output voltage of tube LIM is developed across load resistor L. Resistor K provides cathode bias for tube LIM, and capacitor A provides cathode bypass. Resistor R is a voltage-dropping resistor. Capacitor B bypasses to ground any high frequencies which might be present. The output of tube LIM is coupled to tube AMP through d-c blocking capacitor F.

c. Tube AMP amplifies the constant-level output of tube LIM. The output of tube AMP is developed across output transformer OUT. Transformer OUT has two secondary windings, one of which is connected to the trigger amplifier (detector) circuit and the other to the signal data converter (frequency indicator). Potentiometer OUT in the detector output is used to adjust the signal level to about −6 dbm. Capacitor C bypasses to ground any high frequencies which might be present. Resistor M provides the grid leak to ground. Resistor N provides cathode bias. Resistor P is a voltage-dropping resistor. Capacitor C provides high-frequency bypass. Resistors C, D, and F provide impedance matching. Resistor C prevents excessive loss of signal power to the detector circuit in the event of a short circuit across terminals 5A and 7A or in the pair leading from these terminals.

82. Trigger Amplifier AM–591/FGC–1 (Detector Panel)

a. A 9-db pad, consisting of resistors A and B on the trigger amplifier (detector) panel, may be inserted in the circuit between the current regulator and the trigger amplifier. This pad, inserted by means of the ADJ REC GAIN button (figs. 9 and 33), is used when adjusting the gain of the trigger amplifier circuit. The pad is not in the circuit during normal operation.

b. The output of the current limiter is applied to the input sides of both the mark channel filter (M CH FILTER) and space channel filter (S CH FILTER) (fig. 33). The mark channel filter passes a band of about 1,700 to 2,500 cps with negligible attenuation. The space channel filter passes a band of about 2,600 to 3,400 cps with negligible attenuation. Attenuation curves showing the losses in these filters for a range of frequencies appear in figure 29.

c. The output of the space channel filter and the output of the mark channel filter are processed in two similar channels (fig. 33). The signal level at the outputs mentioned above are approximately −8 dbm (fig. 28).

d. The output of the mark channel filter is coupled to the grid of tube MVA through impedance-matching transformer M IN and potentiometer ADJ M REC GAIN. Transformer M IN matches 600 ohms on the filter side to 25,000 ohms on the potentiometer side. Potentiometer ADJ M REC GAIN adjusts the sensitivity of tube MVA by adjusting the magnitude of the signal impressed on tube MVA control grid. Tube MVA is a conventional voltage amplifier. Resistor MB provides cathode bias. Capacitor MA is the cathode bypass capacitor. The output of tube MVA is transformer-coupled by transformer M OUT to the detector, varistor M DET.

e. Mark detector M DET is a copper-oxide varistor arranged as a full-wave rectifier. The v-f input to the detector appears at the output as a positive d-c voltage with an a-c component. Capacitor MB and resistor MC form a network which passes to ground high-frequency portions of the rectified signal. The smoothed d-c output of the detector is applied to both the noise suppression circuit and to the control grid of tube MVB.

(1) Resistors ME and SE in combination with capacitor A control the delay in response of the noise suppression circuit (par. 84).

(2) The smoothed d-c output of the detector is applied through resistor MD to the control grid of amplifier tube MVB. Tube MVB is biased at, or just beyond cut-off by the voltage divider in the cathode circuit (resistors C, E, D, F, and G fig. 33). Tube MVB conducts only when the incoming signal provides a rectified voltage to overcome the bias. Resistor MD limits the potential on the control grid of tube MVB when the signal is of sufficient amplitude to cause grid current to flow. The output current of tube MVB passes through the mark winding of the receive relay. Resistor H is part of the noise suppression circuit (par. 84*b*).

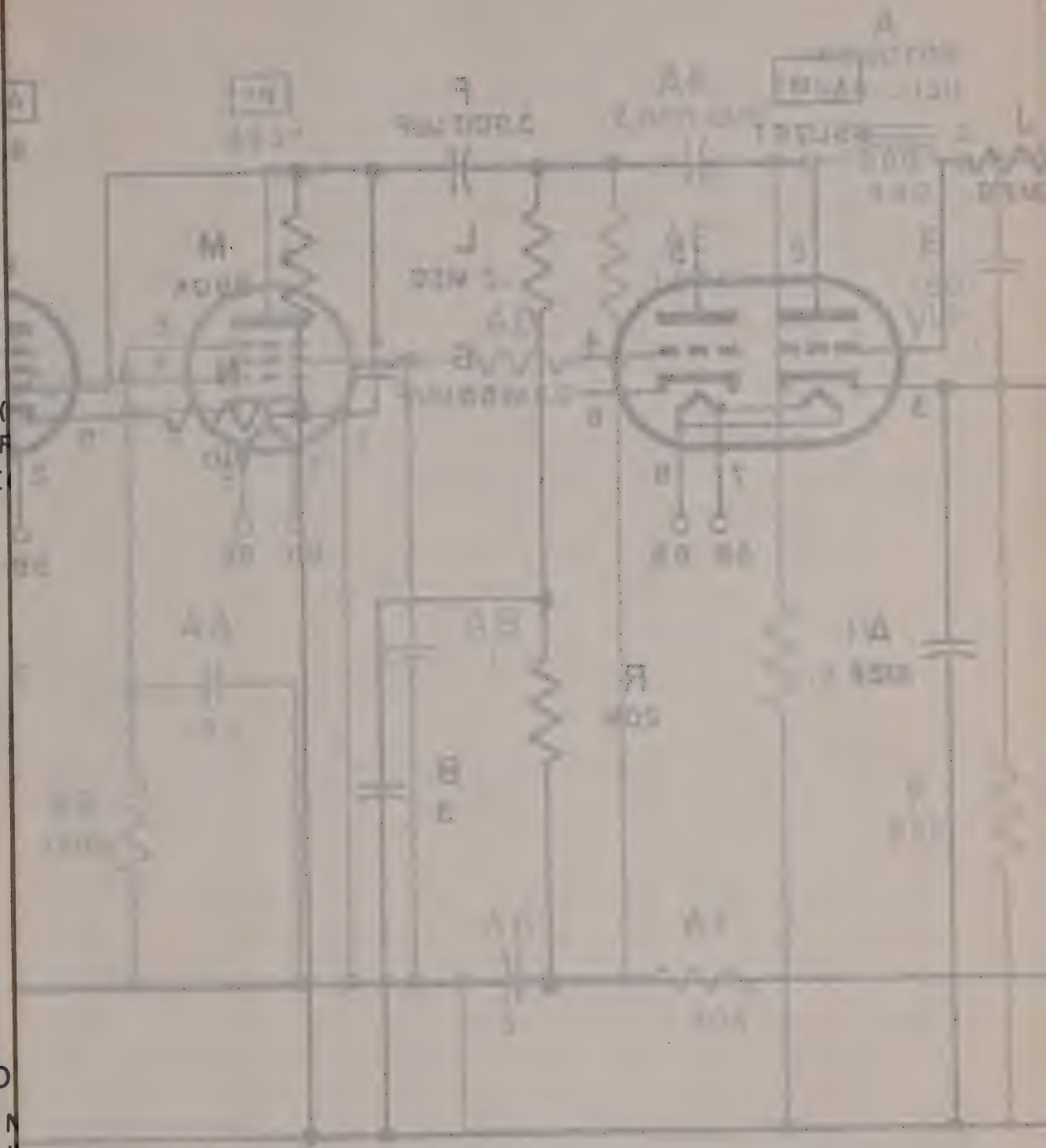

RE

NO

1. N

2.

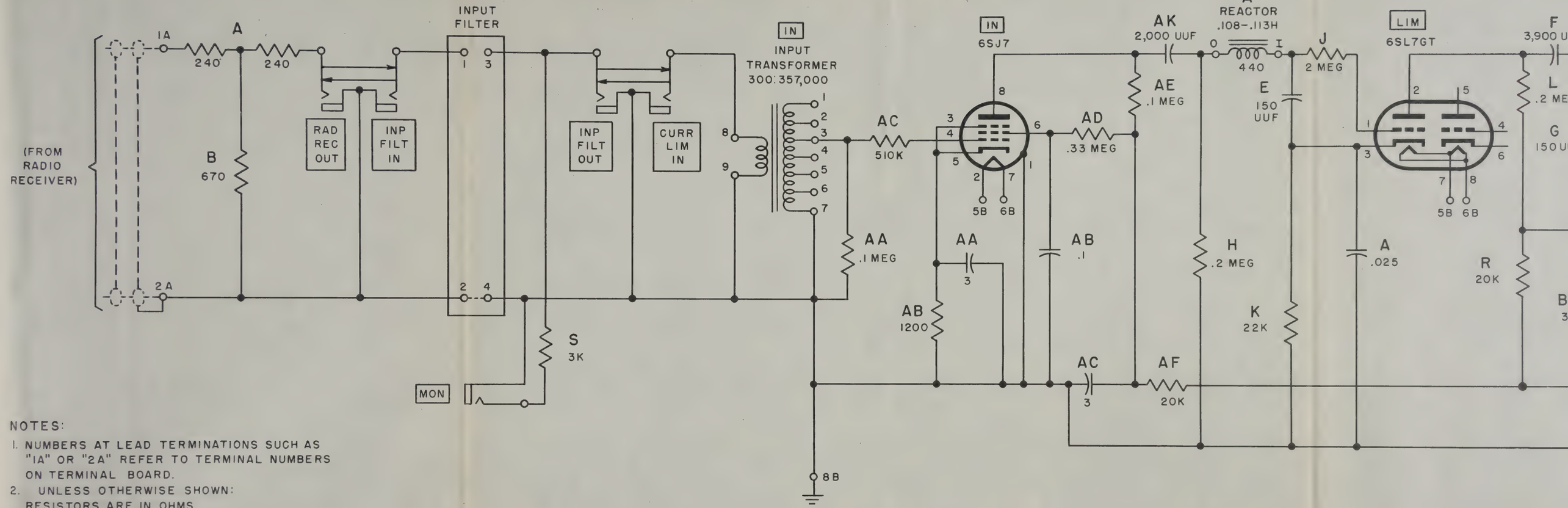

NOTES:

1. NUMBERS AT LEAD TERMINATIONS SUCH AS "1A" OR "2A" REFER TO TERMINAL NUMBERS ON TERMINAL BOARD.
2. UNLESS OTHERWISE SHOWN: RESISTORS ARE IN OHMS CAPACITORS ARE IN UF.

FIGURE 32.—*Current Regulator CN-164/FGC-1 (current limiter), schematic diagram.*

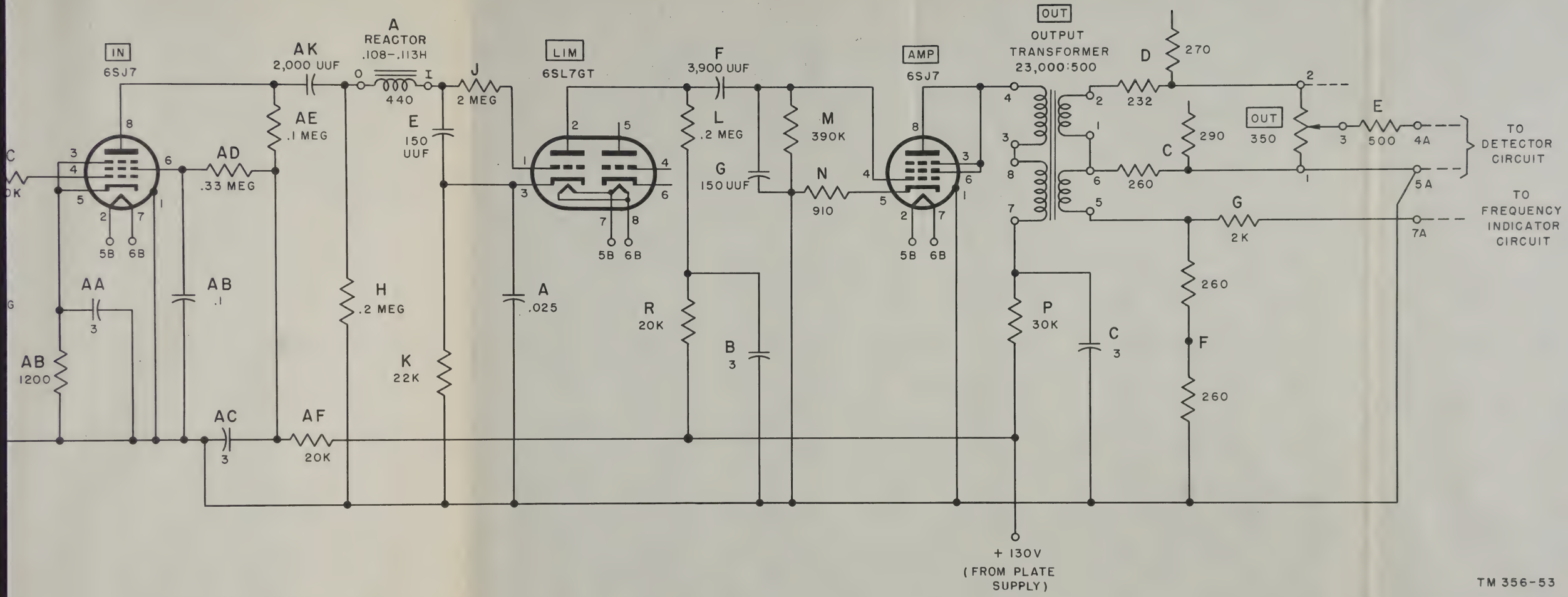

FIGURE 32.—*Current Regulator CN-164/FGC-1 (current limiter), schematic diagram.*

TM 356-53

220707 O - 52 (Face p. 44) No. 1

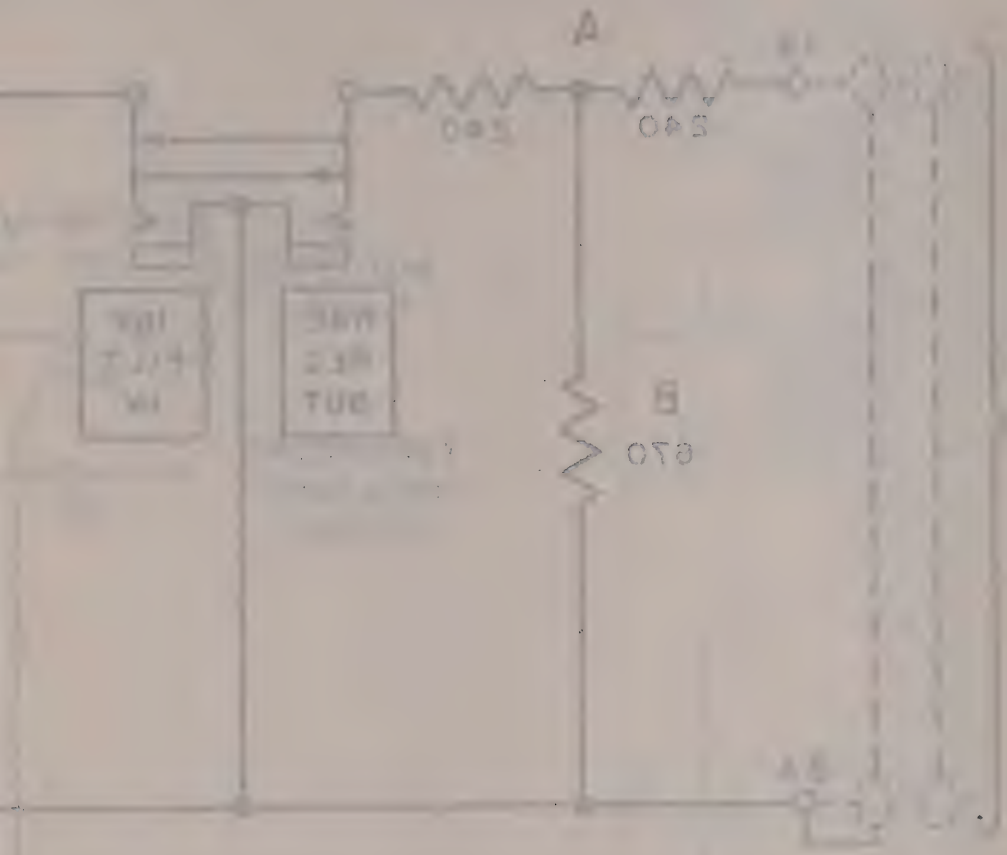
A
240
B
670

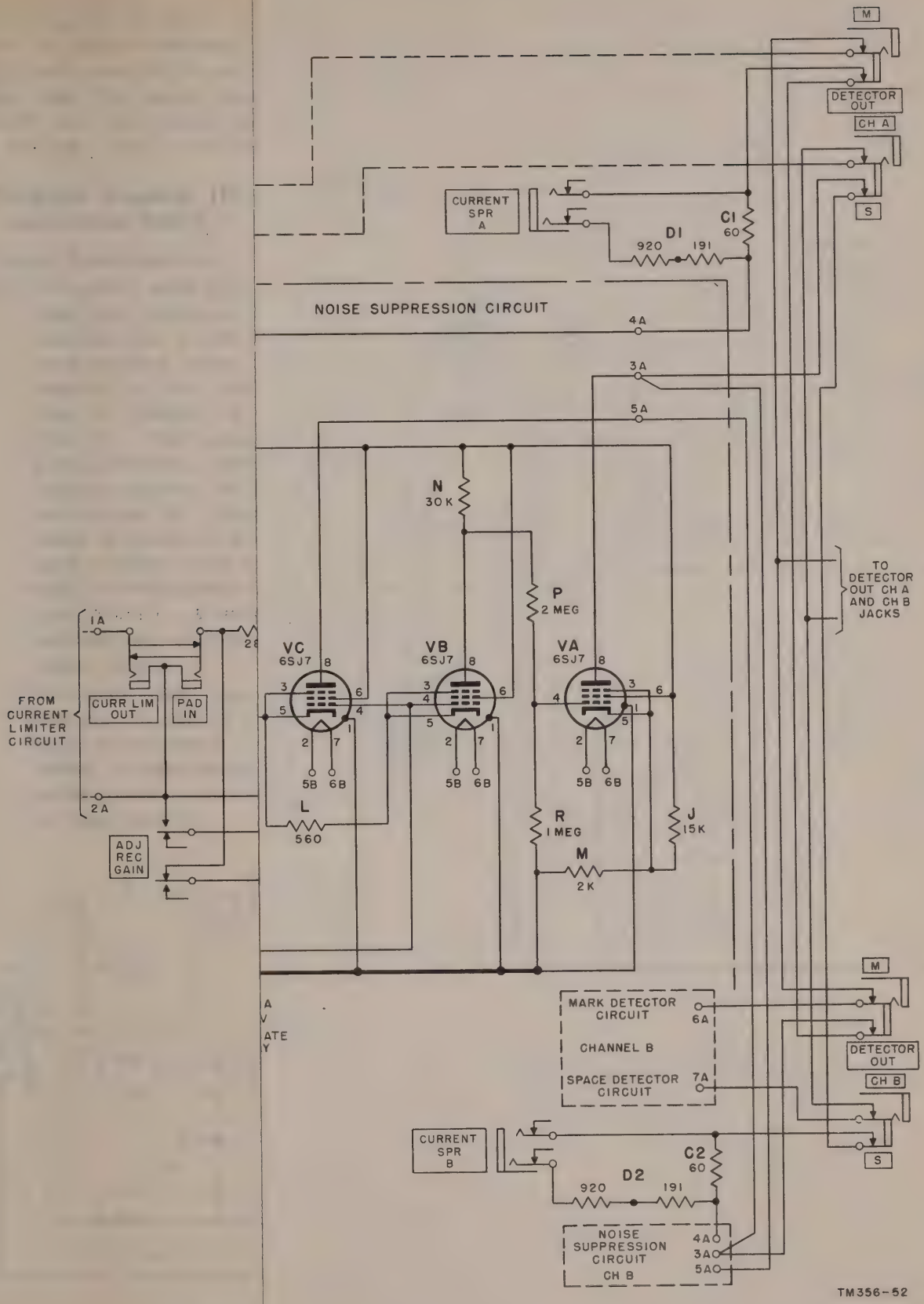
M
DETECTOR OUT
CH A
S
CURRENT SPR A
C1
60
D1
920
191
NOISE SUPPRESSION CIRCUIT
4A
3A
5A
N
30K
P
2 MEG
TO DETECTOR OUT CH A AND CH B JACKS
1A
2B
FROM CURRENT LIMITER CIRCUIT
CURR LIM OUT
PAD IN
2A
ADJ REC GAIN
VC
6SJ7
VB
6SJ7
VA
6SJ7
5B
6B
L
560
R
1 MEG
J
15K
M
2K
A
V
ATE
Y
MARK DETECTOR CIRCUIT
6A
CHANNEL B
SPACE DETECTOR CIRCUIT
7A
M
DETECTOR OUT
CH B
S
CURRENT SPR B
C2
60
D2
920
191
NOISE SUPPRESSION CIRCUIT CH B
4A
3A
5A
TM356-52

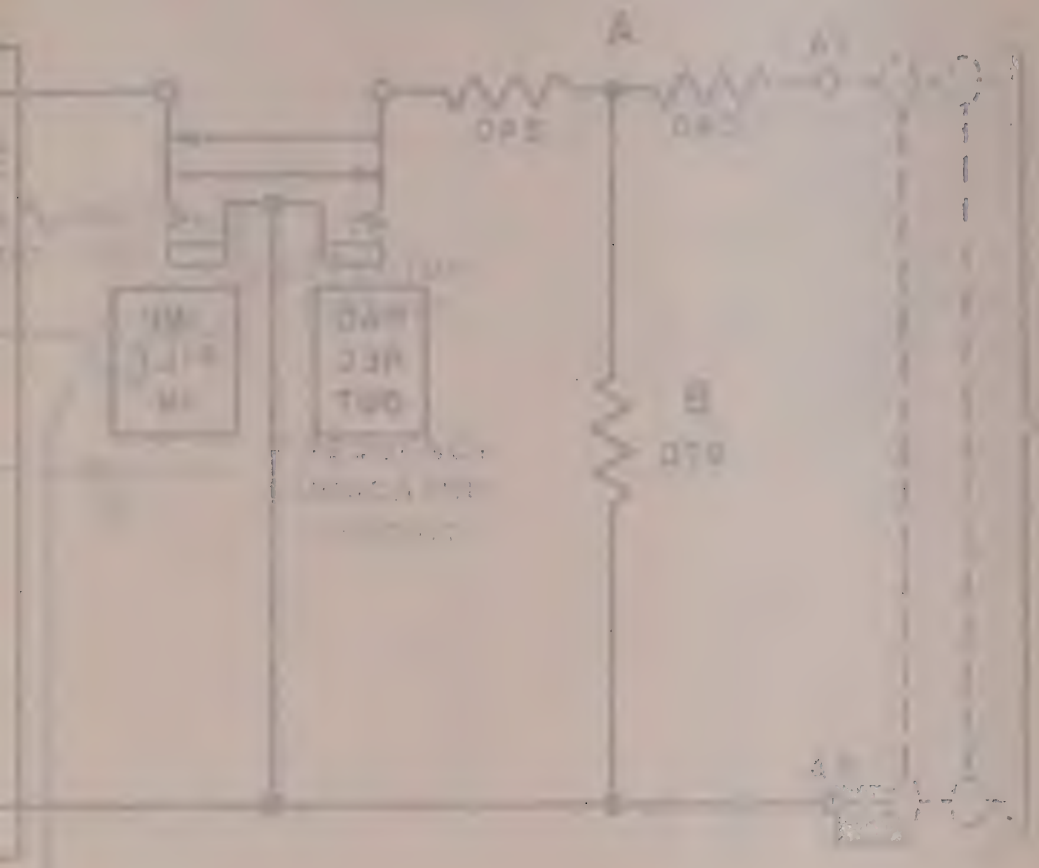
A
B

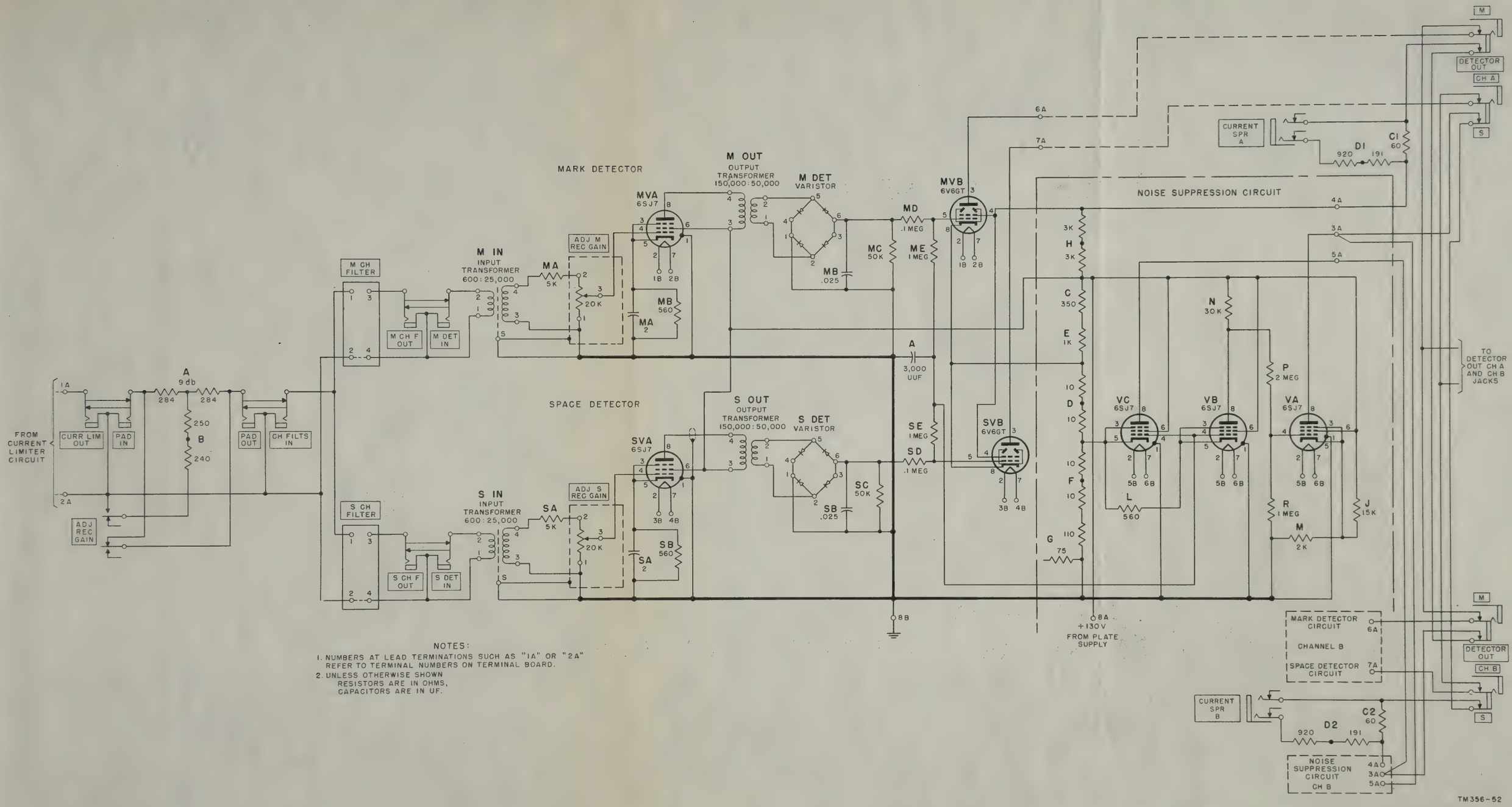

NOTES:

1. NUMBERS AT LEAD TERMINATIONS SUCH AS "1A" OR "2A" REFER TO TERMINAL NUMBERS ON TERMINAL BOARD.
2. UNLESS OTHERWISE SHOWN RESISTORS ARE IN OHMS, CAPACITORS ARE IN UF.

FIGURE 33.—*Trigger Amplifier AM–591/FGC–1 (detector), schematic diagram.*

f. Operation of the space detector channel is identical to that of the mark detector channel except that the input of the space detector channel is taken from the space channel filter (S CH FILTER), and the output passes through the space winding of the receive relay.

83. Telegraph Repeater TH–11/FGG–1 (Receive Relay Panel)

a. Receive Relay Operation.

(1) The receive relay (figs. 34 and 35) is a polar relay with two windings, a space winding and a mark winding. The mark winding input is the combined outputs of the mark detector circuits of channel A and channel B (fig. 45). The space winding input is the combined outputs of the space detector circuits of both channel A and channel B. When a steady mark signal is received, the current in the mark winding is 30 milliamperes, normally, 15 milliamperes from each channel (par. 84*b*(3)). A steady space signal produces an equivalent current in the space winding.

(2) The mark and space windings are arranged so that a mark signal will cause the armature to close the mark contact; a space signal will operate the armature in the other direction and close the space contact.

(3) Operation of the receive relay applies 65 volts to the loop from the 130-volt d-c telegraph supply.

(*a*) The 130-volt d-c power supply is paralleled by a 7,000-ohm center-tapped potentiometer consisting of resistors J and K, which provides a 65-volt difference in potential between the midpoint and either end.

(*b*) When a metallic loop is used, the negative end of the potentiometer is grounded through the power supply. When used with a ground-return loop, the midpoint of the potentiometer and the corresponding side of the telegraph receiving equipment are grounded. A separate, ungrounded power supply, a disk-type rectifier, must be used to provide the 130-volt telegraph supply when a ground-return loop is used (par. 38).

(4) When the receive relay is operated to close the mark contact (fig. 34), the completed loop circuit is from the negative end of the 130-volt d-c telegraph supply through resistor E, REC FILTER, the receive relay contact, and through the monitor circuit (not shown in fig. 34) to the loop. The loop returns to the midpoint of the potentiometer formed by resistors J and K. The current then flows through resistor J to the positive terminal of the 130-volt d-c supply.

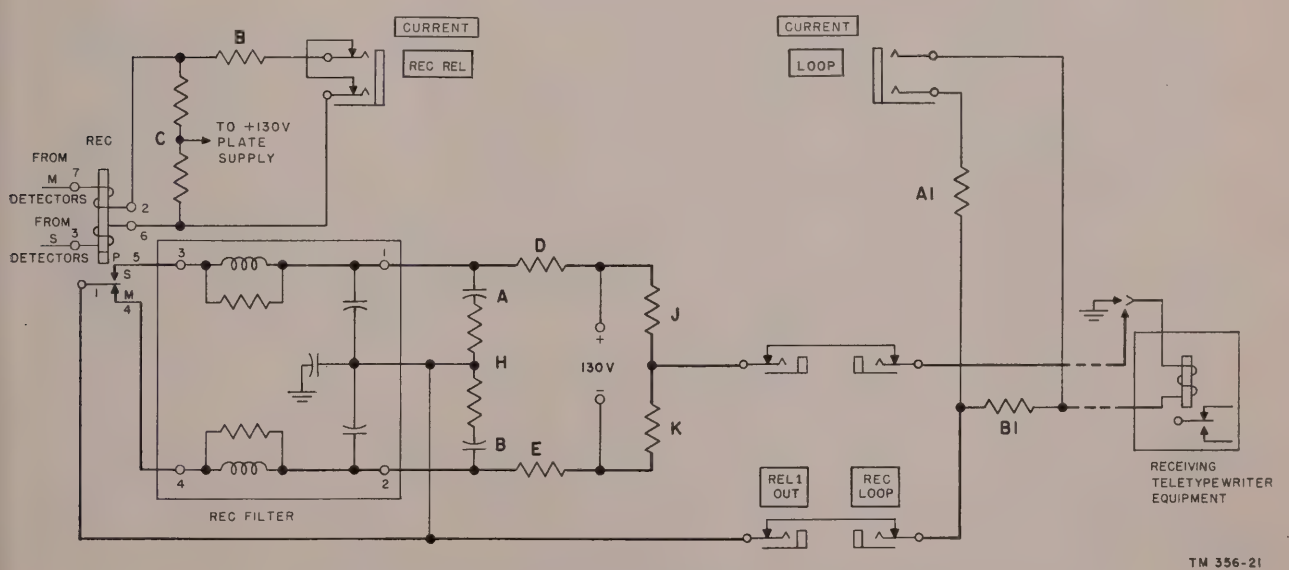

Figure 34. Receive relay circuit, simplified schematic diagram.

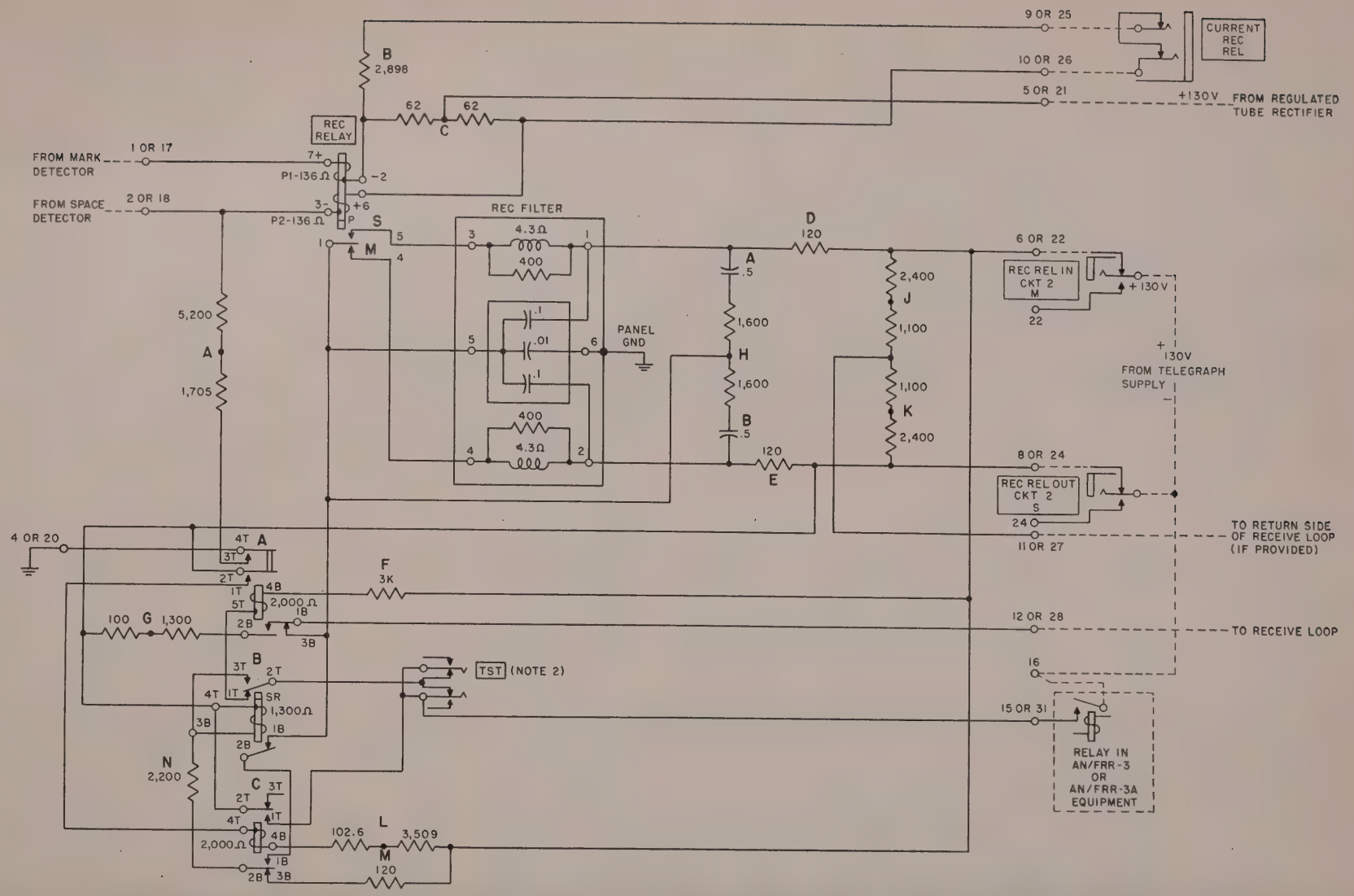

NOTES.

2. TEST KEY [TST] IS A ROTARY SWITCH SHOWN IN NORMAL POSITION (CLOSED). TST
3. UNLESS OTHERWISE SHOWN RESISTORS ARE IN OHMS, CAPACITORS ARE IN UF.

TM 356-55

Figure 35. Trigger Amplifier AM-591/FGC-1 (receive relay panel), schematic diagram.

Note that the loop current does not flow through resistor K when the receive relay is operated to the mark contact. The current in the loop is the current produced by 130 volts acting through approximately 3,500 ohms plus the loop resistance.

(5) When the receive relay is operated to close the space contact, the completed loop circuit is from the negative end of the 130-volt d-c supply through resistor K to the loop. The loop current returns through the monitor circuit (not shown in fig. 34), to the space contact of the receive relay, and through the REC FILTER and resistor D to the positive terminal of the 130-volt supply. Note that the loop current does not flow through resistor J when the receive relay is operated to the space contact. The loop current is the current produced by 130 volts acting through approximately 3,500 ohms plus the loop resistance.

(6) Thus, the loop current flows in one direction through the loop when a mark signal is received, and in the opposite direction through the loop when a space signal is received by the radio receiver.

b. Receive Relay Circuits 1 and 2. Two receive relay circuits are included in Telegraph Repeater TH–11/FGC–1 (receive relay panel). Connections from Trigger Amplifier AM–591/FGC–1 (detector panel) to both receive relay circuits pass through the contacts of the REC REL IN CKT 2 jacks. When no plugs are in these jacks, the circuit of relay 1 is energized. When plugs are inserted in the jacks, the circuit of relay 2 is energized (fig. 36), and the circuit of relay 1 is de-energized. The output of relay 1 is applied to the loop without the use of patch cords. To apply the output of relay 2 to the loop, patch between the RELAY OUT 2 jacks and the REC LOOP jacks.

c. Monitor Circuit.

(1) The purpose of the monitor circuit is to prevent the receiving, teletypewriter equipment (printer) from operating falsely when noise is received under either of two conditions: when the distant radio transmitter is not energized, and when the local radio receiver is disabled to permit the local radio transmitter to send on the receiving frequency (simplex operation).

(2) The monitor circuit performs its function by causing the relay in the teletypewriter receiving equipment (printer) to be held steadily on its mark contact when no signals are received by the radio receiver. The relay in the teletypewriter receiving equipment is released

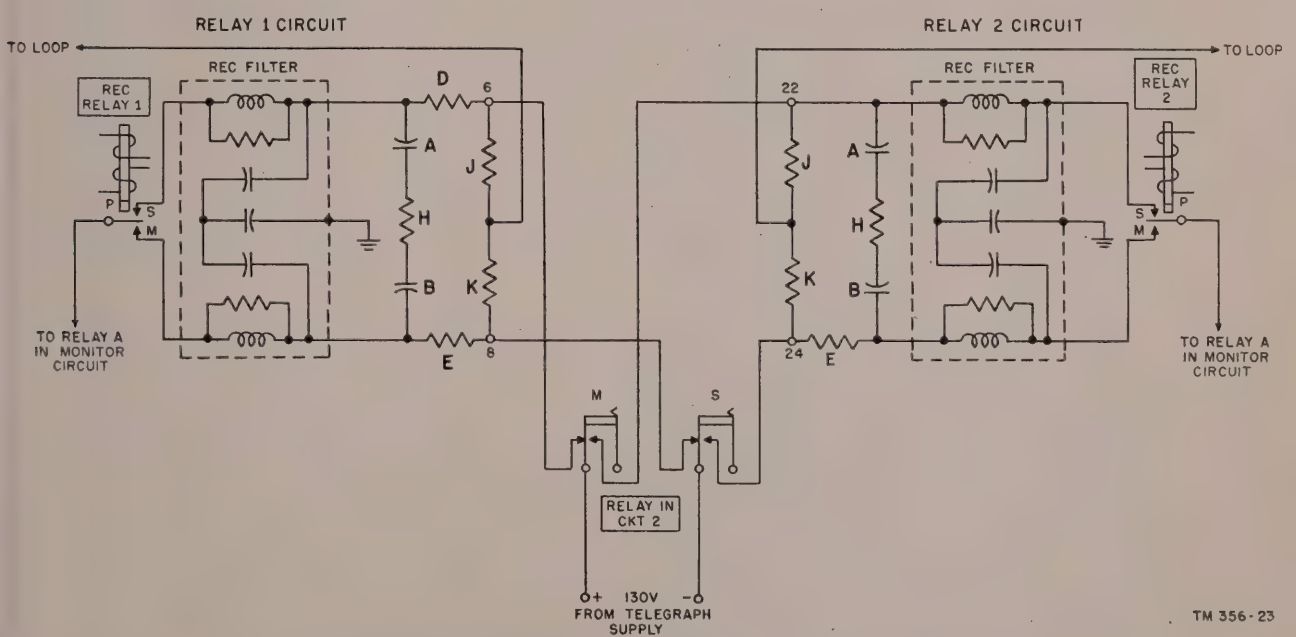

Figure 36. REC REL IN CKT 1 and 2 jacks, interconnections.

when the radio receiver receives a mark frequency signal of more than ¼-second duration.

(3) The monitor circuit is activated when the DIAL—OPER—SEND switch in the radio receiver is operated to either the DIAL or SEND position. Operating this switch to either of the monitor-activating positions activates relay A (fig. 37).

(*a*) The current through the relay A winding passes from the negative side of the 130-volt d-c telegraph supply through the relay in the radio receiver cabinet (closed by the DIAL—OPER—SEND switch) and through switch TST to contact 2T of relay B. Relay B is normally operated. The circuit continues through contact 1T of relay B and through the winding of relay A to the positive side of the 130-volt d-c telegraph supply.

(*b*) The letters I and B following relay contact numbers refer to top and bottom terminals of the relays.

(4) When relay A is energized, the receive relay is operated to its *space* condition, relay C is energized, and the relay in the receiving teletypewriter equipment (printer) is operated to its MARK condition. These actions are explained in (*a*) through (*c*) below.

(*a*) When relay A is energized, contacts 3T and 4T of relay A close. Closing contacts 3T and 4T completes the circuit from ground to the positive side of the 130-volt plate supply. The circuit is from ground, through contacts 4T and 3T of relay A, resistor A, the space winding of the receive relay, and the space half of resistor C to the positive side of the 130-volt supply. Current flowing through this circuit operates the receive relay to its space contact and tends to hold the relay in this condition. While noise at the mark frequency may cause the receive relay contact to open momentarily, this opening of the space contact will not effect operation of the monitor circuit unless the receive relay closes the mark contact for a period exceeding one-fourth second ((5)(*b*) following).

(*b*) Operation of relay A also causes the closing of contacts 1B and 2B of relay A. Closing contacts 1B and 2B connects the negative side of the 130-volt d-c telegraph supply to the loop through resistor G. The loop returns to the common point of resistors J and K, and current flows through resistor J to the positive side of the 130-volt d-c telegraph supply. Current flowing through this circuit operates the relay in the receiving teletypewriter equipment mark contact and prevents operation of the printer because of noise.

(*c*) Operation of relay A energizes relay C. The energizing circuit is from the negative side of the 130-volt d-c telegraph supply through contacts 2T and 1T of relay A, and through the relay C winding and resistor L to the positive side of the 130-volt d-c telegraph supply.

(5) When relay C is energized, the circuits of energized currents for relays A and B are changed, so that both remain energized after the DIAL—OPER—SEND switch ((3)(*a*) above) is returned to the OPER position.

(*a*) When contacts 1T and 2T of relay C are closed, the energizing circuit for relay A is from the negative side of the 130-volt d-c telegraph supply through contacts 2T and 1T of relay C, through switch TST and contacts 2T and 1T of relay B, and through the winding of relay A and resistor F to the positive side of the 130-volt d-c telegraph supply. Note that the current now does not flow through the remotely controlled relay in the radio receiver as it did when the switch first was closed (3)(*a*) above).

(*b*) Relay B is normally operated. The normal energizing circuit is from the negative side of the 130-volt d-c telegraph supply through the winding of relay B and contacts 2B and 3B of relay C to the positive side of the 130-volt d-c telegraph supply. Closing of contacts 2B and 1B of relay C disconnects the coil of relay B from the positive side of the 130-volt d-c telegraph supply, and reconnects it to

this supply through contacts 2B and 1 B of relay C, contacts 2B and 1B of relay B, and the space contacts of the receive relay. Since relay B is a slow-release relay, it remains operated during the time required for relay C contacts to operate.

(6) The monitor circuit unlocks the AN/FGC–1(*) when the radio receiver receives a signal at the mark frequency of greater than ¼-second duration. When such a signal is received, the mark winding of the receive relay is energized. The armature of the receive relay is attracted to the mark contact, and the circuit through the space contact is broken. Breaking the circuit through the space contact breaks the circuit through the winding of relay B. Relay B releases after one-fourth second and breaks the circuit through the winding of relay A. Relay A releases and breaks the circuit through the winding relay C. Relay C releases and re-energizes relay B through its normal circuit ((5) (*b*) above).

(7) Switch TST opens the holding circuit of the receive relay when switch TST is operated. Operating switch TST opens the circuit through the winding of relay A so that relay A cannot operate. The

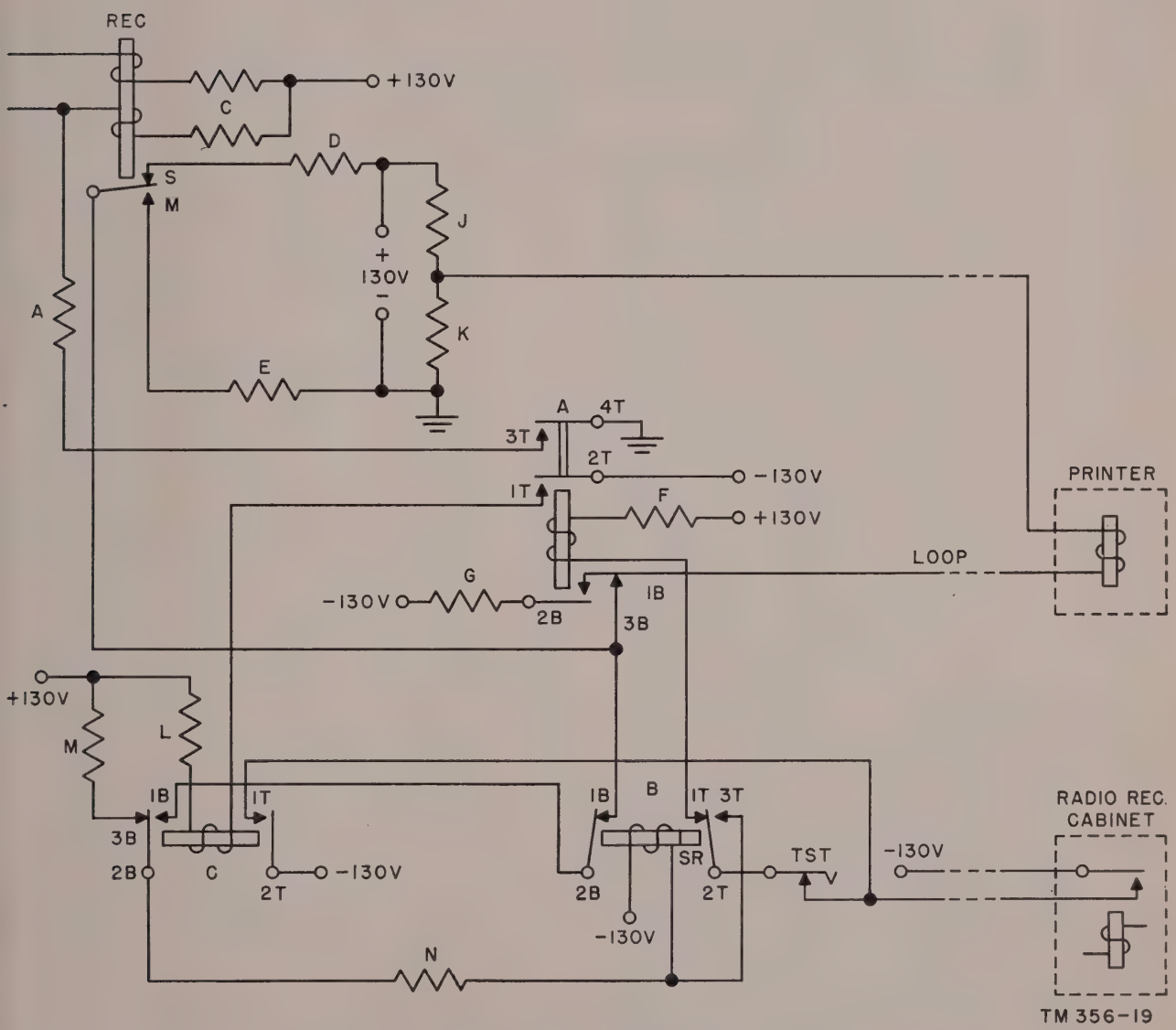

Figure 37. Monitor circuit, simplified schematic diagram.

circuit through the receive relay space winding is closed only when relay A is operated.

84. Noise Suppression Circuit

The noise suppression circuit (fig. 38) decreases the amplitude of signals applied to the receive relay windings from channel B when that channel is noisier than channel A. At the same time, the amplitude of the signal applied to the receive relay from the quieter channel is increased. A similar increase in the current supplied to the receive relay by channel B is effected if channel A becomes noisy. Noise in a channel will increase when the radio signal received by that channel is decreased by fading. The circuit description in *a* through *c* below explains the circuit action when noise is received in channel B. Reception of noise by channel A will cause a similar effect, but the channel A and channel B actions will be interchanged.

Note. Figure 38 shows the noise suppression circuits of both channel A and channel B. The channel B noise suppression circuit is mounted on detector B panel. The channel A noise suppression circuit is mounted on detector A panel. The circuits are identical, and corresponding circuit elements have identical reference symbols.

a. When a mark signal is received, the rectified voltage on the control grid of tube MVB is approximately +16 volts with respect to ground. At the same time, the voltage on the control grid of tube SVB is zero volts if no noise is being received. (When a space signal is received, the above voltages are interchanged.) A point electrically half-way between these points thus would have a voltage of +8 volts with respect to ground when either a space or mark signal is received. Noise will alter this voltage (*b* below). The junction of resistors ME and SE is electrically half-way between the control grids of tubes MVB and SVB. This junction point is connected to the control grids of tubes VC and VB, producing +8 volts on the control grids when no noise is received.

b. When noise is received, some of the noise currents will be rectified in the mark detector while a space signal is being rectified in the space detector. Similarly, some of the noise currents will be rectified in the space detector while a mark signal is being rectified in the mark detector. When this occurs, the control grid of tubes MVB or SVB which is not carrying a signal is raised above zero volts (*a* above), and the junction of resistors ME and SE is raised above +8 volts. This potential on the control grids of tubes VC and VB causes the plate currents in these tubes to increase above their normal values of about 1 and .5 milliampere, respectively.

(1) Resistor H in channel B is the plate load for tube VC. The circuit from tube VC to resistor H is traced through the DETECTORS CH B MARK, CH A MARK, and SPR B jacks. When the current through tube VC and resistor H increases, the voltage at the low-potential end of resistor H decreases. The screens of tubes MVB and SVB are connected to the lower end of resistor H. Thus, when the plate current of tube VC increases, the screen voltage of tubes MVB and SVB decreases. Decreasing the screen voltage of tubes MVB and SVB decreases the plate current in these tubes. The output of these tubes is applied to the windings of the receive relay.

(2) Resistor N is the plate load for tube VB. When the plate current in tube VB increases, the plate voltage decreases. A potentiometer consisting of resistors P and R maintains the grid voltage of tube VA at one-third of the plate voltage of tube VB. When the plate voltage of tube VB decreases, the grid voltage of tube VA decreases. This causes a reduction in the plate current of tube VA. Resistor H in channel A is the plate load resistor for tube VA in channel B. The circuit from tube VA to resistor H is traced through the DETECTORS OUT S and the SPR A jacks. When the plate current of tube VA of channel B decreases, the voltage at the low-potential end of resistor H in channel A increases. Since the screens of tubes MVB and SVB of channel A are connected to the low end of resistor H in channel A, the plate current of these tubes increases. The output of these tubes is applied to the windings of the receive relay.

(3) Thus, when noise is received in channel B, the output current to the receive relay from channel B decreases, and the output from channel A increases. A similar increase in channel B current and a decrease in channel A current occurs when channel A becomes noisy. The relay current is maintained at a nearly

constant value of 30 milliamperes, but the portion of the current contributed by the noisy channel is reduced, and the portion contributed by the quiet channel is increased.

c. Resistors C, D, F, and G form a voltage divider which provides cathode bias for tubes SVB, MVB, and VC. Resistor L provides cathode bias for tube VB. Resistors J and R provide cathode bias for tube VA. Capacitor A, in conjunction with resistors ME and SE, controls the speed of response on the noise suppression circuit.

85. Receiver Control C–948/FGC–1 (Automatic Frequency Control)

a. Receiver Control C–948/FGC–1 (automatic frequency control) functions to maintain the mark frequency delivered to the AN/FGC–1 (*) by the radio receivers within a 50–cps range of 2,125 cps. If the mark frequency deviates from 2,125 cps, a d-c voltage appears in the output of the automatic frequency control circuit which causes a compensating change in the frequency of the radio receiver output.

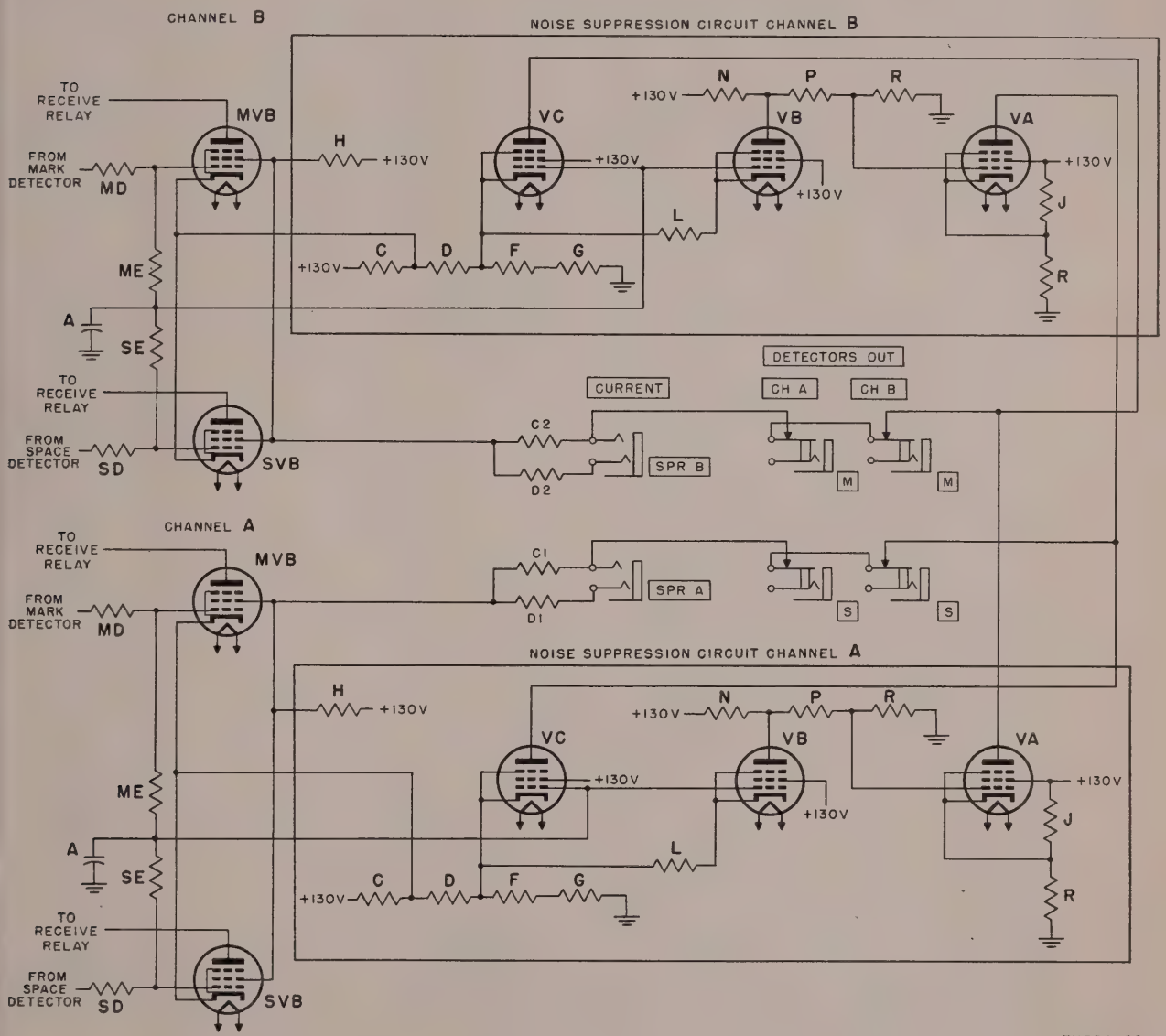

Figure 38. Noise suppression circuits of channel A and channel B, simplified schematic diagram.

b. Signals are applied to the circuit (fig. 39) through input filter IN which passes frequencies in the 1,700- to 2,500-cps band. Note that this band includes the mark frequency (2,125 cps) but excludes the space frequency (2,975 cps). Resistor E supplies the correct output impedance for the input filter.

c. Tubes V2 and V3 amplify the mark signals passed by the input filter. Mark signals are applied to the control grid of tube V2 through resistor F and capacitor D2. Resistor P is the plate load for tube V2. Resistors M and N form a voltage divider used to provide screen potential D-c blocking capacitor H couples tube V2 to tube V3. Resistor Q provides grid leak for tube V3. Resistor R and capacitor J provide cathode bias for tube V3.

d. The output of tube V3 contains two branches.

(1) Tube V3 is coupled to tube V4 through capacitor K and resistor Y. This output of tube V3, described in *e* and *f* below, is used to provide automatic gain control in tube V2 and to control the action of tube V1.

(2) Tube V3 is transformer-coupled by output transformer OUT to tube V5 through parallel high- and low-pass filters which act as a discriminator. This output of tube V3 is described in *g* and *h* below.

e. (1) Tube V4 is the automatic gain control diode. The cathodes of tube V4 are biased at about +23 volts by a potentiometer consisting of resistors AA and Z. The output of tube V3 is applied to the plates of tube V4 through capacitor K and resistor Y. When the signal on the plates of tube V4 exceeds 46 volts peak-to-peak, the diodes conduct on the positive half-cycle. When the diodes conduct, pulses of current are passed by the diodes, increasing the charge on capacitor K.

(2) During the succeeding negative half-cycle, tube V4 does not conduct, and capacitor K discharges. Because of the different impedances presented by the parallel paths through resistors V and U and capacitor L, the major portion of capacitor K discharge current flows into capacitor L, charging capacitor L. A small portion of capacitor K discharge current flows through resistors V and U to ground.

(3) The junctions of resistors V and W, and of resistors V and T, are made negative with respect to ground by the small portion of the discharge current flowing through them during the time that tube V4 is conducting.

(4) During the second positive halfcycle, in which tube V4 again conducts, capacitor L discharges through resistors V and U, maintaining the negative potential on the above mentioned resistor junctions.

(5) These junctions are connected to the grids of tubes V1 and V2, maintaining a negative bias on tubes V1 and V2 when the signal level is great enough to cause tube V4 to conduct.

(6) The negative potential supplied to tube V1 is used to keep tube V1 biased beyond cut-off as long as the mark signal is within the band-pass frequencies of the input filter (*f* below).

f. If the receivers are so far out of tune that the receiver output frequency will not pass through the input filter (outside the 1,700- to 2,500-cps range), no signal will appear at the output of tube V3. With no signal at the plate of tube V3, no negative potential will be applied to the control grid of tube V1, and tube V1 will become active. (Several seconds are required for capacitors B and C to discharge after the automatic gain control bias is removed. Hence, several seconds will elapse before tube V1 becomes active.) Tube V1 is a bypass for the input filter. The circuit elements associated with tube V1 are such that the loss when the signal passes through the bypass is greater than the loss when the signal passes through the filter. This increased loss results in a lower signal level at the output of tube V3. The low signal level at the output of tube V3, acting through the automatic gain control circuit, maintains tube V1 in an active condition until the automatic frequency control (*h* below) readjusts the mark frequency to a level which will pass through the input filter.

g. The mark signal induced in the secondary of transformer OUT (fig. 40) is impressed on a low- and a high-pass filter in parallel. The filters and tube V5 form a discriminator. The filters are adjusted to have the same losses at 2,125 cps by variable resistor FREQ ADJ. The outputs of the filters are rectified separately in tube V5, which is a double diode. When the mark fre-

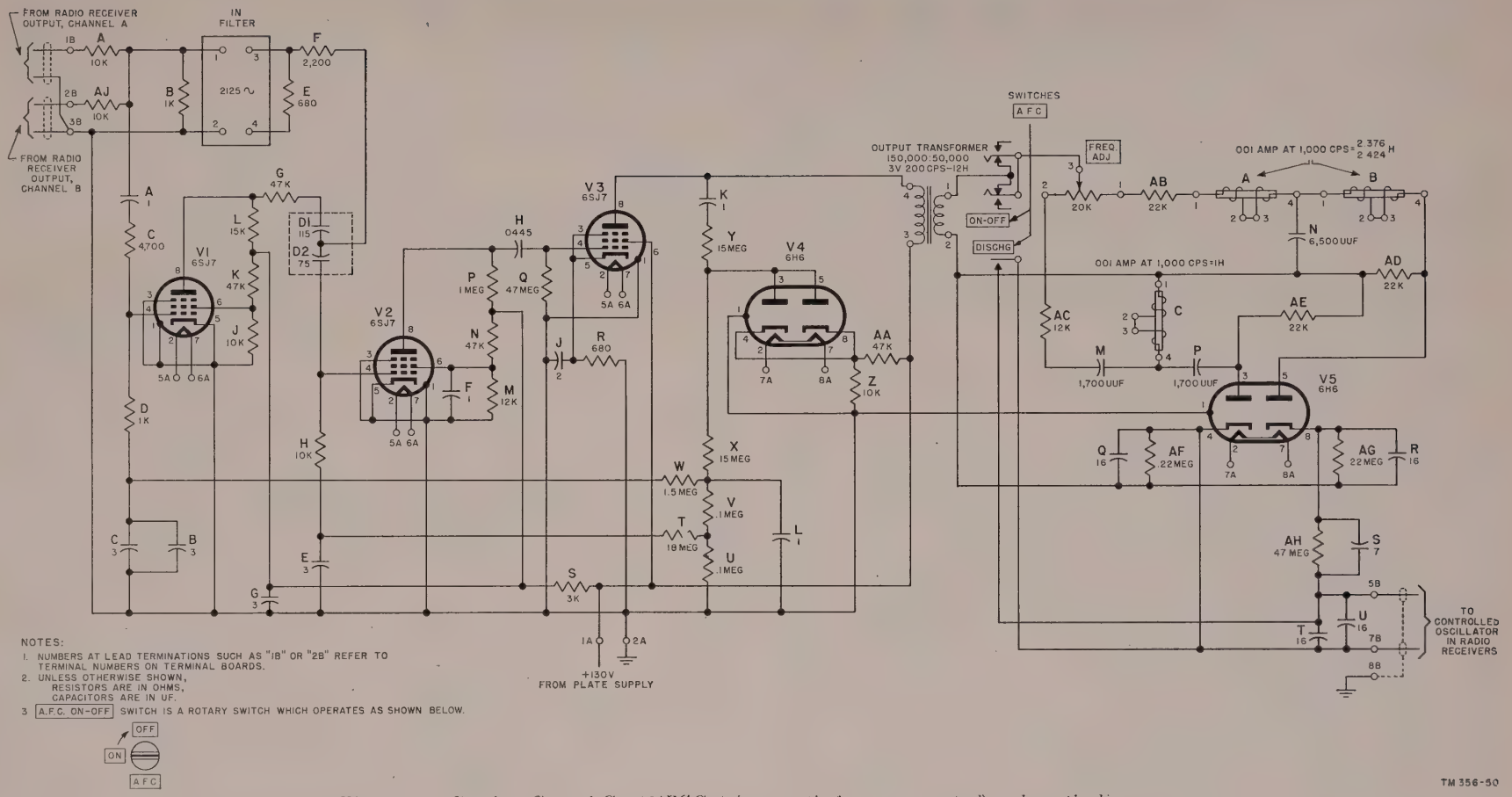

Figure 39. Receiver Control C-948/FCC-1 (automatic frequency control), schematic diagram.

quency is 2,125 cps, the currents through the diodes are equal, and no potential difference exists between the output terminals of the circuit. If the mark frequency falls below 2,125 cps, the low-pass filter passes the signal with little loss, while the high-pass filter allows little or no current to pass. The upper diode section (fig. 40) passes a larger current than the lower diode section, and a larger potential is developed across load resistor AG than across load resistor AF. The upper output terminal is thus positive with respect to the lower terminal. If the mark frequency is higher than 2,125 cps, the high-pass filter passes more current than the low-pass filter, the lower diode passes more current than the upper diode, and the lower terminal becomes positive with respect to the upper terminal. The lower terminal is grounded at the radio receiver, so that a voltage which is positive with respect to ground appears on the upper terminal when the mark frequency falls below 2,125 cps. A voltage which is negative with respect to ground appears on the upper terminal when the mark frequency rises above 2,125 cps.

h. The low-pass filter consists of reactors A and B and capacitor N. The high-pass filter consists of reactor C and capacitors M and P. Resistors AB, AC, AD, and AE match the input and output impedances of these filters. Resistor AH and capacitor S function to prevent hunting of the automatic frequency control circuit. Capacitors T and U slow the response of the control voltages to frequency changes, prevent hunting, and reduce the effect of interference picked up in the frequency control lead to the radio receiver.

i. If the mark frequency departs 60 cps from 2,125 cps, the automatic frequency control circuit will deliver a control voltage of approximately 1 volt. A larger frequency departure from 2,125 cps will produce a control voltage greater than 1 volt. The control voltage is applied to the beat-frequency oscillator in the radio receiver in such a manner as to control the frequency of the oscillator. A control voltage of 1 volt causes a change of 1,000 cps in the radio oscillator frequency. The maximum control voltage is 8 volts. If the mark frequency were as much as 1,000 cps off frequency, the automatic frequency control circuit would tend to generate its maximum control voltage. Because of the time required to charge capacitors T and U, however, the control voltage will not reach it maximum at once. As the con-

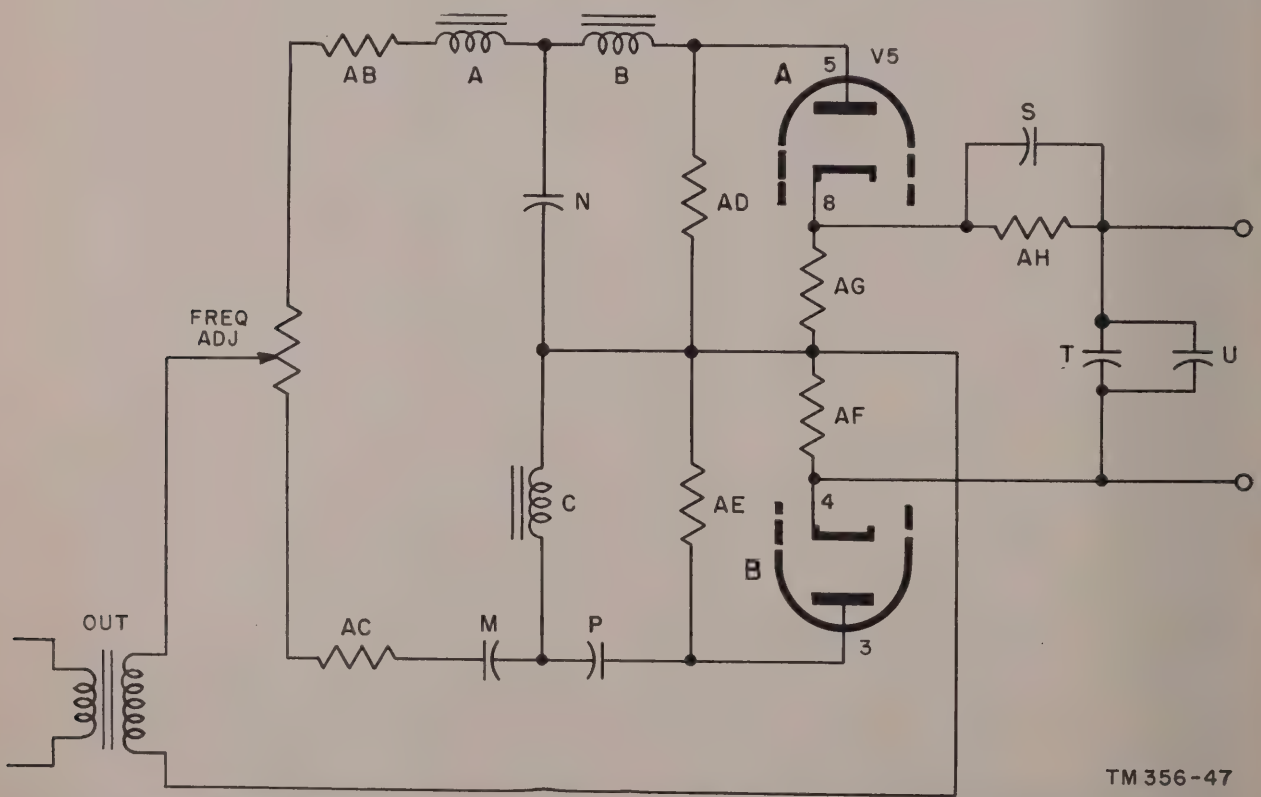

Figure 40. Receiver Control C–948/FGC–1 (automatic frequency control), discriminator circuit, simplified schematic diagram.

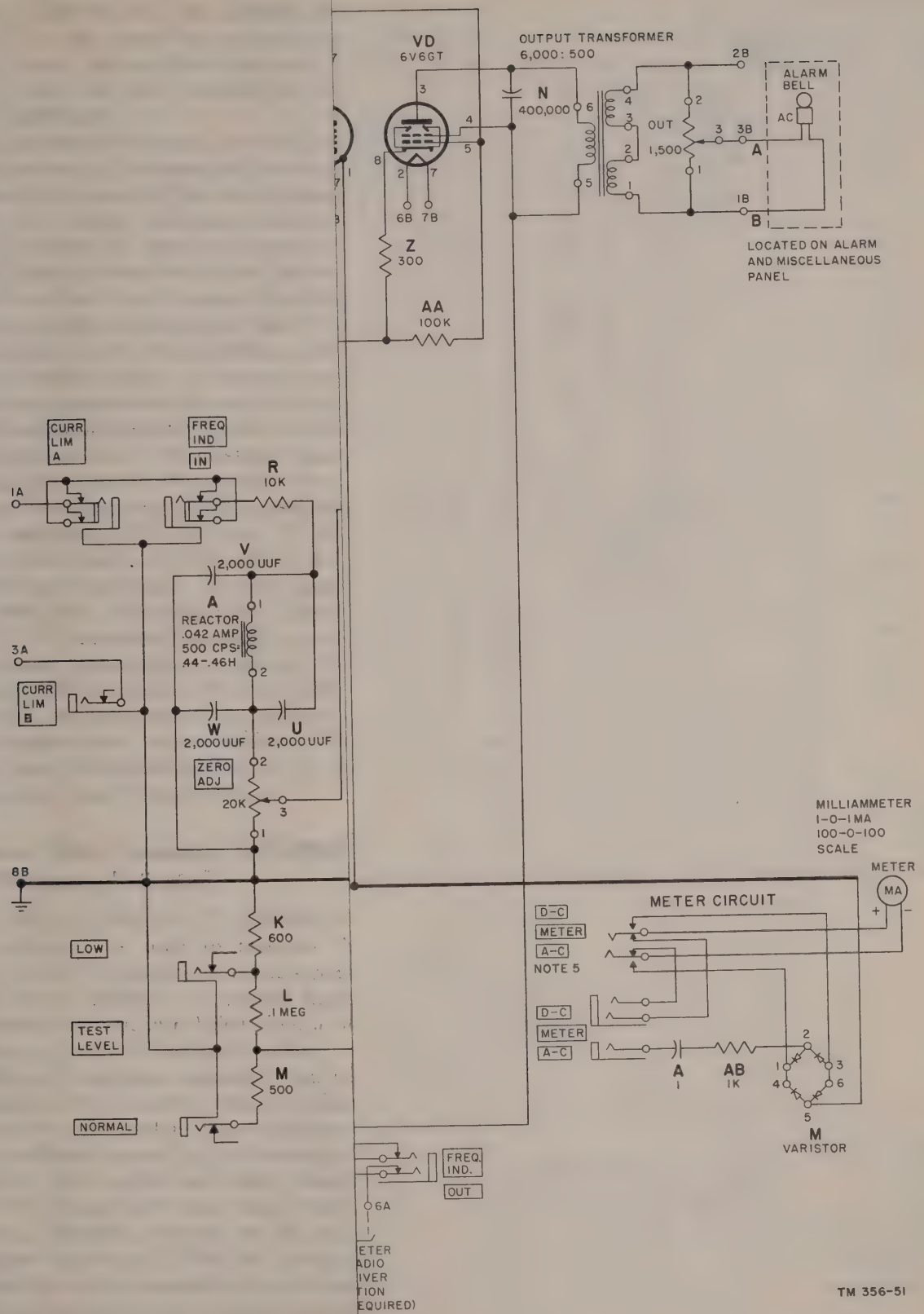
VD
6V6GT
OUTPUT TRANSFORMER
6,000 : 500
N
400,000
OUT
1,500
2B
3B
A
1B
B
ALARM BELL
AC
LOCATED ON ALARM AND MISCELLANEOUS PANEL
6B
7B
Z
300
AA
100K
CURR LIM A
FREQ IND
IN
1A
R
10K
V
2,000 UUF
A
REACTOR
.042 AMP
500 CPS
.44-.46H
3A
CURR LIM B
W
2,000 UUF
U
2,000 UUF
ZERO ADJ
20K
8B
K
600
LOW
L
.1 MEG
TEST LEVEL
M
500
NORMAL
MILLIAMMETER
1-0-1 MA
100-0-100
SCALE
METER
MA
METER CIRCUIT
D-C
METER
A-C
NOTE 5
A
1
AB
1K
M
VARISTOR
FREQ. IND.
OUT
6A
ETER
ADIO
IVER
TION
EQUIRED)

TM 356-51

quency is 2,125 cps, the currents through the diodes are equal, and no potential difference exists between the output terminals of the circuit. If the mark frequency falls below 2,125 cps, the low-pass filter passes the signal with little loss, while the high-pass filter allows little or no current to pass. The upper diode section (fig. 40) passes a larger current than the lower diode section, and a larger potential is developed across load resistor AG than across load resistor AF. The upper output terminal is thus positive with respect to the lower terminal. If the mark frequency is higher than 2,125 cps, the high-pass filter passes more current than the low-pass filter, the lower diode passes more current than the upper diode, and the lower terminal becomes positive with respect to the upper terminal. The lower terminal is grounded at the radio receiver, so that a voltage which is positive with respect to ground appears on the upper terminal when the mark frequency falls below 2,125 cps. A voltage which is negative with respect to ground appears on the upper terminal when the mark frequency rises above 2,125 cps.

h. The low-pass filter consists of reactors A and B and capacitor N. The high-pass filter consists of reactor C and capacitors M and P. Resistors AB, AC, AD, and AE match the input and output impedances of these filters. Resistor AH and capacitor S function to prevent hunting of the automatic frequency control circuit. Capacitors T and U slow the response of the control voltages to frequency changes, prevent hunting, and reduce the effect of interference picked up in the frequency control lead to the radio receiver.

i. If the mark frequency departs 60 cps from 2,125 cps, the automatic frequency control circuit will deliver a control voltage of approximately 1 volt. A larger frequency departure from 2,125 cps will produce a control voltage greater than 1 volt. The control voltage is applied to the beat-frequency oscillator in the radio receiver in such a manner as to control the frequency of the oscillator. A control voltage of 1 volt causes a change of 1,000 cps in the radio oscillator frequency. The maximum control voltage is 8 volts. If the mark frequency were as much as 1,000 cps off frequency, the automatic frequency control circuit would tend to generate its maximum control voltage. Because of the time required to charge capacitors T and U, however, the control voltage will not reach it maximum at once. As the con-

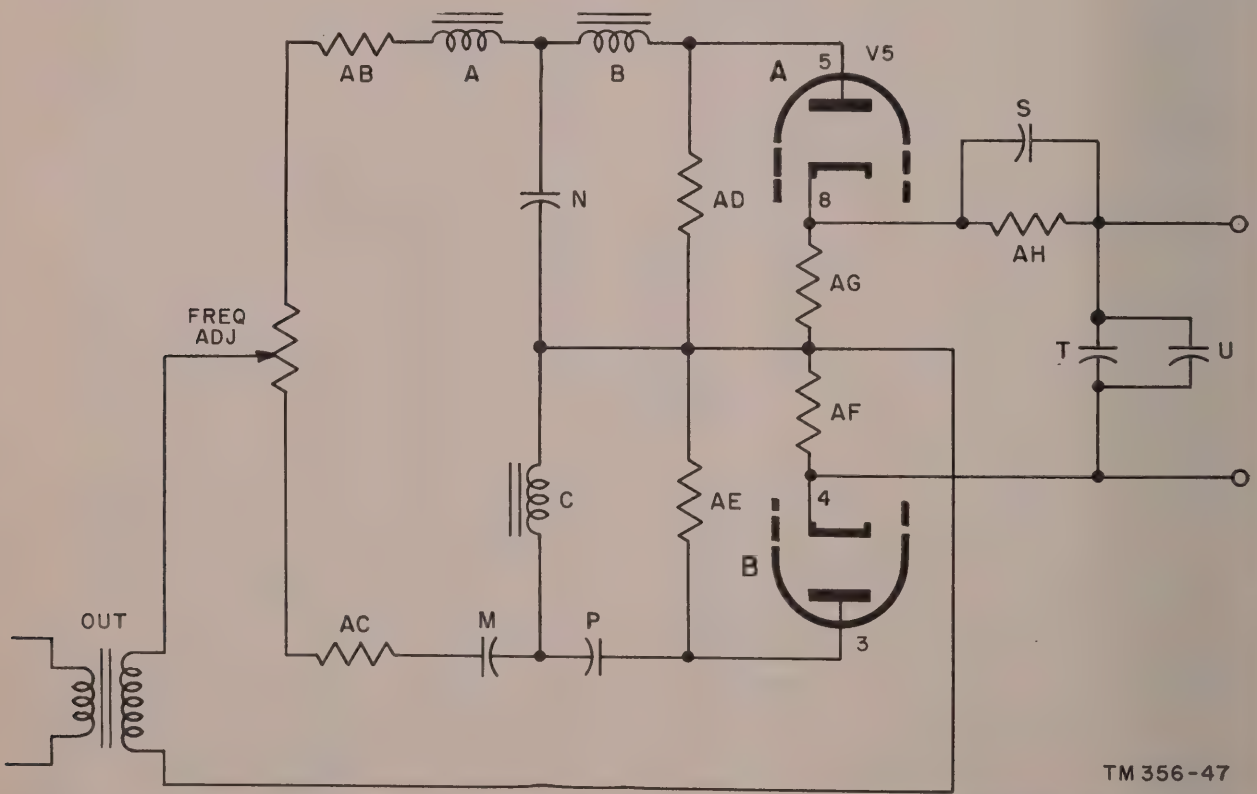

Figure 40. Receiver Control C–948 FGC–1 (automatic frequency control), discriminator circuit, simplified schematic diagram.

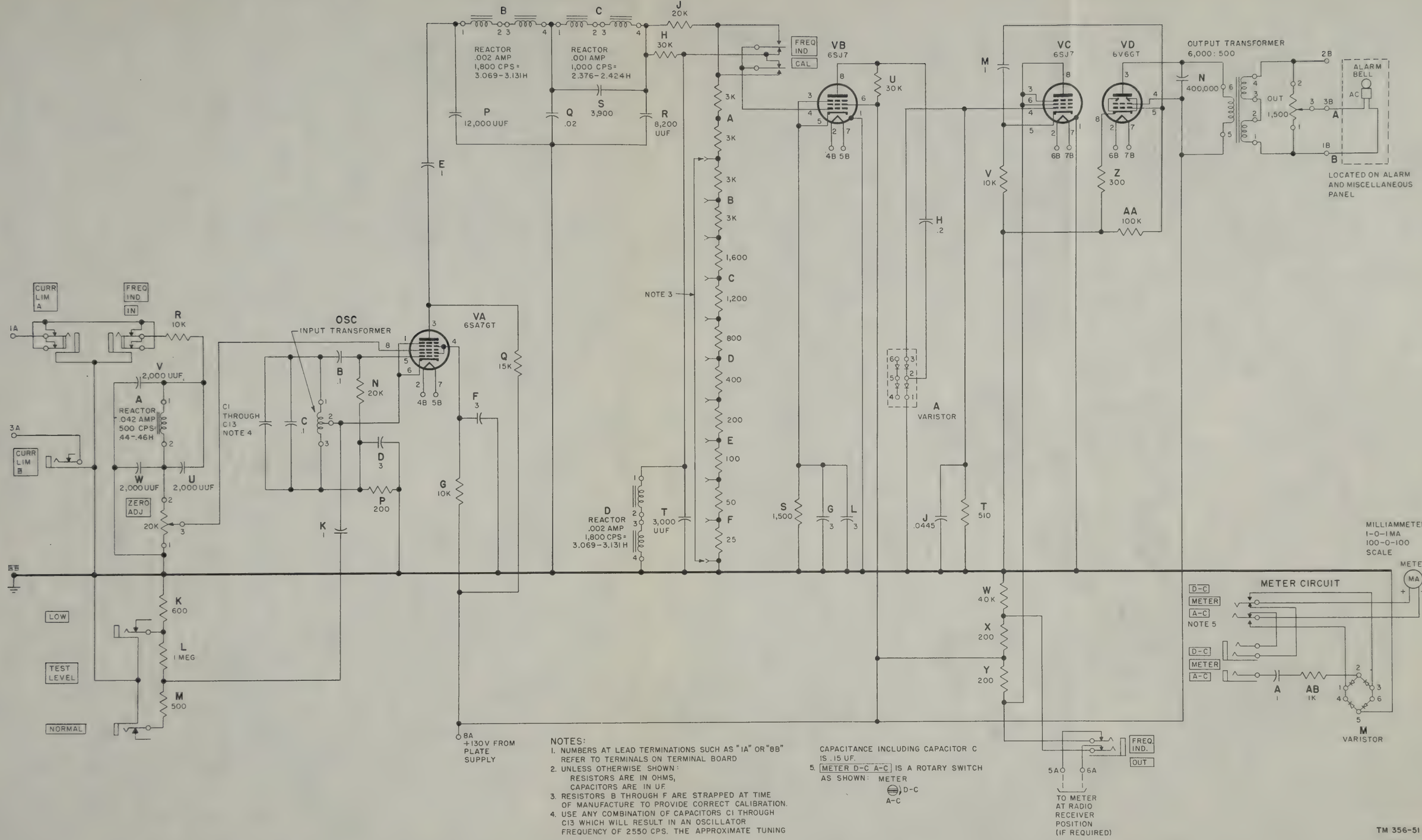

NOTES:

1. NUMBERS AT LEAD TERMINATIONS SUCH AS "1A" OR "8B" REFER TO TERMINALS ON TERMINAL BOARD
2. UNLESS OTHERWISE SHOWN:
   RESISTORS ARE IN OHMS,
   CAPACITORS ARE IN UF.
3. RESISTORS B THROUGH F ARE STRAPPED AT TIME OF MANUFACTURE TO PROVIDE CORRECT CALIBRATION.
4. USE ANY COMBINATION OF CAPACITORS C1 THROUGH C13 WHICH WILL RESULT IN AN OSCILLATOR FREQUENCY OF 2550 CPS. THE APPROXIMATE TUNING CAPACITANCE INCLUDING CAPACITOR C IS .15 UF.
5. METER D-C A-C IS A ROTARY SWITCH AS SHOWN: METER D-C A-C

FIGURE 41.—*Signal Data Converter CV-205/FGC-1 (frequency indicator), schematic diagram.*

trol voltage increases, it is applied to the beat-frequency oscillator, and the oscillator frequency changes. By the time the control voltage has reached 1 volt, the oscillator frequency will be changed 1,000 cps, and equilibrium will have been re-established.

j. The automatic frequency control circuit will tune the receiver in 1 or 2 seconds if the transmitter is energized after being off the air for more than 10 seconds. If, under operating conditions, the frequency should be changed suddenly several hundred cycles, it would take about 10 seconds for the receiver to be retuned because the delay circuit associated with the control grid of tube V1 (capacitors B and C, *f* above) must discharge before this tube can become active. A steady space signal lasting about 5 seconds can be sent without causing the radio oscillator frequency to depart excessively from the correct value. If the steady space signal is prolonged to about 10 seconds, the receiver tuning will be changed so that the space frequency becomes approximately 2,125 cps. It then will require a steady mark of 10 seconds for the correct tuning to be re-established. A steady space signal lasting more than 5 seconds should, therefore, be avoided. The automatic frequency control circuit can be made inoperative by turning the AFC knob to the OFF position. The DISCHG button is provided to short-circuit the output control voltage momentarily when testing. This will save the time which otherwise would be required for capacitors T and U to discharge.

86. Signal Data Converter CV–205/FGC–1 (Frequency Indicator)

Signal Data Converter CV–205/FGC–1 (frequency indicator) is used to measure the frequencies of the v-f space and mark signal input from the radio receivers. A general description of the circuit is given in *a* below, and a detailed description is given in *b* through *i* below.

a. The mark and space signals, taken from an output branch of the current limiter in channel A (figs. 28 and 61), are beat against a 2,550-cps signal from an oscillator located in the frequency indicator circuit. The mark and space frequencies, normally 2,125 and 2,975 cps, respectively, each produces a difference product of 425 cps when beat against 2,550 cps. This 425 cps is passed through a filter which separates the 425 cps from other heterodyne products. An inductance in the path of the 425-cps current produces a voltage drop which is proportional to the frequency of the impressed signal. Thus, if the mark and space signals vary from their normal frequencies, the difference product will be other than 425 cps when beat against the local oscillator, and the voltage across the inductance will be other than its normal value. This voltage is rectified and applied to a d-c, center-zero meter. The meter is arranged to read zero if the space and mark frequencies differ by 850 cps and if they are located symmetrically about 2,550 cps. If the space and mark frequencies are symmetrically located about 2,550 cps, but the frequency separation is less than 850 cps, the meter reading will be negative. If the frequency separation is greater than 850 cps, the meter reading will be positive. If the frequencies are not symmetrically located about 2,550 cps, the meter indication will be unsteady.

b. Space and mark signals are applied to the frequency indicator circuit (fig. 41) from the output of the current limiter in channel A. The output of the channel B current limiter may be used as the input for the frequency indicator circuit by patching the current limiter B CURR LIM OUT jack to the CURR LIM B jack of the frequency indicator, but this procedure is not necessary since the oscillator of the radio receivers is common to both channels, and insures that the audio frequencies in both channels will be identical.

c. The mark and space frequencies from the CURR LIM A jack are applied to a filter consisting of capacitors U, V, and W and reactor A (fig. 41). This filter attenuates frequencies above 4,000 cps. The output of the filter is applied to grid 3 of tube VA through variable resistor ZERO ADJ.

d. Tube VA is a pentagrid converter. The cathode and grids 1 and 2, together with the associated circuit elements, form an oscillator that produces a frequency of 2,550 cps. Transformer OSC, an autotransformer used as the oscillator coil, is connected between ground and grid 1 of tube VA. The cathode of tube VA is connected to a tap on transformer OSC. Capacitors C and C1 through C13, in parallel with transformer OSC, tune the resonant circuit thus formed to 2,550 cps.

e. The interaction of the mark and space frequencies with the oscillator frequency (*a* above) produces the following difference frequencies in the output of tube VA:

2550 cps—2125 cps (mark frequency)=425 cps

2975 cps (space frequency)—2550 cps=425 cps

Reactors B and C and capacitors S, Q, P, and R form a filter that passes frequencies below 1,000 cps and attenuates higher frequencies.

f. The output of the filter passes through resistor H and reactor D to ground. Resistor H and reactor D form the load for tube VA. The resistance of resistor H is large compared with the impedance of reactor D, so the output of tube VA will be practically constant regardless of frequency. The voltage drop across reactor D, however, is directly proportional to the frequency. Capacitor T makes the voltage drop across reactor D more constantly proportional to the frequency. Since the voltage drop across reactor D is proportional to the frequency of the heterodyne difference product (*a* above), this voltage drop may be used to measure the frequency. Resistor S is the cathode-biasing resistor for tube VB. Capacitors G and L are cathode bypass capacitors.

g. The voltage drop across reactor D is applied to the control grid of amplifier tube VB, and the amplified voltage is rectified in half-wave rectifier varistor A. The rectified voltage is applied to control grid of d-c amplifier tube VC. The plate circuit of tube VC (figs. 41 and 42) forms one arm of a Wheatstone bridge; the other arms consist of resistors W, X, and Y. The meter is connected across one diagonal of the bridge. In the calibration process (*h* below), the circuit is adjusted to balance this bridge when the heterodyne frequency (*f* above) is 425 cps. If the frequency is lower than 425, the bridge will be unbalanced and the meter deflection will be negative (to the left); if the frequency is higher than 425 cps, the meter deflection will be positive (to the right). The deflection will be nearly proportional to the frequency, with a full-scale deflection for a frequency departure of about 300 cps.

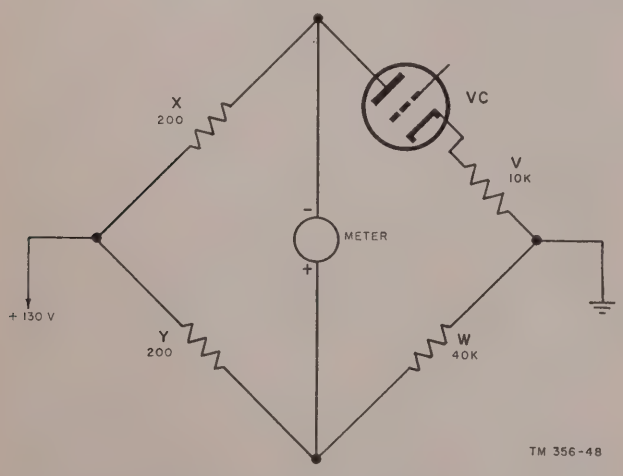

Figure 42. Plate circuit of frequency indicator tube VC, simplified schematic diagram.

h. When the CAL button is depressed, the control grid of tube VB is connected to a potentiometer (consisting of resistors A through F) which is in parallel with reactor D. The voltage across the potentiometer is constant regardless of the frequencies of the space and mark signals. Thus, a constant voltage is applied to the control grid of tube VB instead of a voltage dependent on the frequencies of the space and mark signals. The potentiometer is adjusted at the time of manufacture so that the voltage applied to the control grid of tube VB is the same as the voltage across reactor D when 425 cps is applied across reactor D. Calibration of the meter to read zero for a 425-cps output of tube VA consists of depressing the CAL button and adjusting variable resistor ZERO ADJ until the meter indicates zero.

i. Bell FREQ IND, located in Under Voltage Alarm BZ–27/FGC–1 (alarm and miscellaneous panel), sounds when the frequency of the received signals deviates from the assigned frequency by more than an allowable limit. The cathode of d-c amplifier tube VC is connected to the control grid of amplifier tube VD through capacitor M. As long as the voltages derived from space and mark signals at varistor A are identical, tube VD will not be affected. When these voltages differ, a pulse will pass through capacitor M to the control grid of tube VD at each transition between mark and space. Tube VD amplifies these pulses and applies them to bell FREQ IND through transformer OUT. These pulses cause bell FREQ IND to sound. The frequency-deviation sensitivity of the alarm circuit may be adjusted by variable resistor OUT. Resistor AA is the grid leak resistor for tube VD, and resistor Z supplies cathode bias.

87. Fuse Panel

a. The fuse panel (figs. 21 and 22) contains 26 grasshopper fuses. The fuses are arranged in three groups: +130-volt plate supply protectors, +130-volt telegraph supply protectors, and 6.3-volt filament supply protectors. The following table shows the circuits supplied through each fuse.

Fuse	Circuit supplied
±6.3 V FIL:	
LIM A	Filaments of all current limiter A tubes.
B	Filaments of all current limiter B tubes.
DET A:	
M	Filaments of detector A tubes MVA and MVB.
S	Filaments of detector A tubes SVA and SVB.
NS	Filaments of channel A noise suppression circuit.
DET B:	
M	Filaments of detector B tubes MVA and MVB.
S	Filaments of detector B tubes SVA and SVB.
NS	Filaments of channel B noise suppression circuit.
FREQ IND:	
AB	Filaments of frequency indicator tubes VA and VB.
CD	Filaments of frequency indicator tubes VC and VD.
AFC:	
V1–3	Filaments of automatic frequency control tubes V1, V2, and V3.
V4–5	Filaments of automatic frequency control tubes V4 and V5.
ALM:	
REL	Buzzer circuit through contacts of relays P and T.
BUZ	Buzzer circuit through filament bus and filament return.
±130V PLT:	
LIM A	B+ for current limiter A panel.
B	B+ for current limiter B panel.
DET A	B+ for detector A panel.
B	B+ for detector B panel.
REC REL 1	Potential for receive relay 1 windings.
2	Potential for receive relay 2 windings.
FREQ IND	B+ for frequency indicator panel.
TST SET	TST SET BAT jack.
AFC	B+ for automatic frequency control panel.
ALM	Winding of relay P.
+130V TLG:	
REC REL	Receive relay and loop.
ALM	Winding of relay T.

b. All fuses on the fuse panel are grasshopper fuses. Each of these fuses has three terminals. The upper and lower terminals are connected by the fuse element, and contact is made to these terminals by the screws that hold the fuses in place on the fuse panel. The third contact, located between the upper and lower terminals on the back of the fuse, is a spring contact. The spring contact is held in a nonoperated position by the fuse element. When the fuse operates, this spring contact is released and makes contact between the lower fuse terminal and a bus-bar behind the fuses.

c. When any of the fuses other than the ALM fuses operate, buzzer FA sounds. The alarm circuit for the filament fuses is shown in figure 45. The alarm circuit for the 130-volt plate and 130-volt telegraph fuses is shown in figure 44.

(1) When a filament fuse operates, contact is established between the lower fuse terminal and the fuse bus-bar. The completed circuit is from terminal 4 on on the power supply panel, through the lower fuse terminal to the fuse bus-bar, through the ALM BUZ fuse, through the buzzer winding to the filament return bus-bar, to terminal 6 on the power supply panel.

(2) When a 130-volt plate supply fuse operates, contact is established between the 130-volt plate supply (terminal 3 on the power supply panel) and the fuse bus-bar. Relay P is energized through a circuit that starts at ground; it passes through the winding of relay P and fuse ALM, and through the fuse bus-bar and the operated fuse spring contact to the 130-volt plate supply. When relay P is energized, top contacts 1 and 2 and bottom contacts 1 and 2 close. Closing these contacts completes the circuit through buzzer FA, and the buzzer sounds. The circuit through buzzer FA starts at terminal 6 on the power supply panel; it passes through the buzzer winding, through top contacts 1 and 2 of relay P, and through fuse ALM REL to terminal 4 on the power supply panel.

(3) When the REC REL fuse operates, contact is established between the 130-volt telegraph supply (terminal 7 on the power supply panel) and the fuse bus-bar. Relay T is energized through a circuit that starts at ground; it passes through the winding of relay T, and through fuse ALM and the fuse bus-bar to terminal 7 on the power supply panel. When relay T is energized, top contacts 1 and 2 and bottom contacts 1 and 2

close. Closing these contacts completes the circuit through buzzer FA, and the buzzer sounds. The circuit through buzzer FA starts at terminal 6 on the power supply panel; it passes through the buzzer winding, through top and bottom contacts 1 and 2 of relay T in parallel, and through fuse ALM REL to terminal 4 on the power supply panel.

88. Jack Panel

The circuit positions of all jacks except the TST SET BAT, PLT V TST, and TLG V TST jacks are shown in figure 61. The circuit positions of the more commonly used jacks are shown in simplified form in figure 45. The applications of the jacks are described in the various test procedures in which the jacks are used. The circuit positions of the TST SET BAT, PLT V TST, and TLG V TST jacks are described in *a* through *c* below and shown in figure 60. A front view of the jack panel showing the panel markings appears in figure 20.

a. Jack TST SET BAT is used to supply +130 volts from the plate supply to operate Test Set I–193–A. The ring of jack TST SET BAT is connected to the ground strap on the fuse panel. The tip of the jack is connected through fuse TST SET to terminal 3 of the power supply.

b. Jack PLT V TST is used to test the output of the 130-volt plate supply. The sleeve of jack PLT V TST is connected to the 130-volt strap on the fuse panel through resistor F on Under Voltage Alarm BZ–27/FGC–1. The tip of the jack is connected to the ground strap on the fuse panel through resistor E on the BZ–27/FGC–1.

c. Jack TLG V TST is used to test the output of the 130-volt telegraph supply. The sleeve of jack TLG V TST is connected through resistor H and fuse REC REL to terminal 7 on the power supply or to the positive terminal of the disk rectifier, if supplied. The tip of the jack is connected through resistor G to ground or to the negative terminal of the disk rectifier, if supplied.

89. Power Supply PP–737/FGC–1 and Power Supply PP–763/FGC–IX, General

a. Power is provided for the operation of the AN/FGC–1(*) by either of two power supplies, the PP–737/FGC–1 or the PP–763/FGC–1X. These power supplies function in the same manner, and, except where otherwise specified, the theory discussion in this manual applies to both. The power supplies are described in paragraphs 19 and 20, and differences between the two are described in paragraph 23*a*. A schematic diagram of Power Supply PP–737/FGC–1 is shown in figure 46. A schematic diagram of Power Supply PP–763/FGC–1X is shown in figure 47.

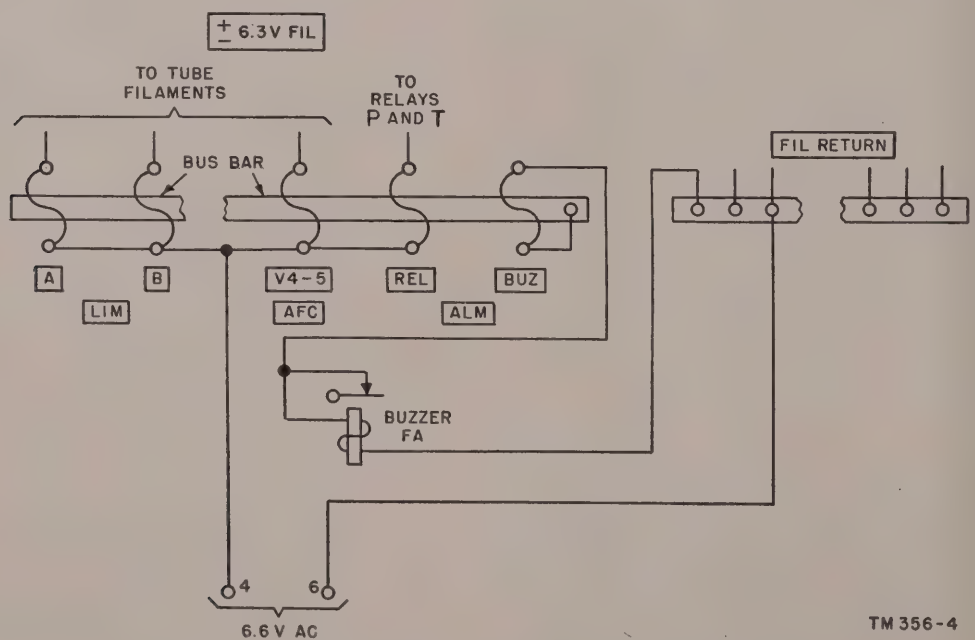

Figure 43. Filament supply fuse alarm circuit, schematic diagram.

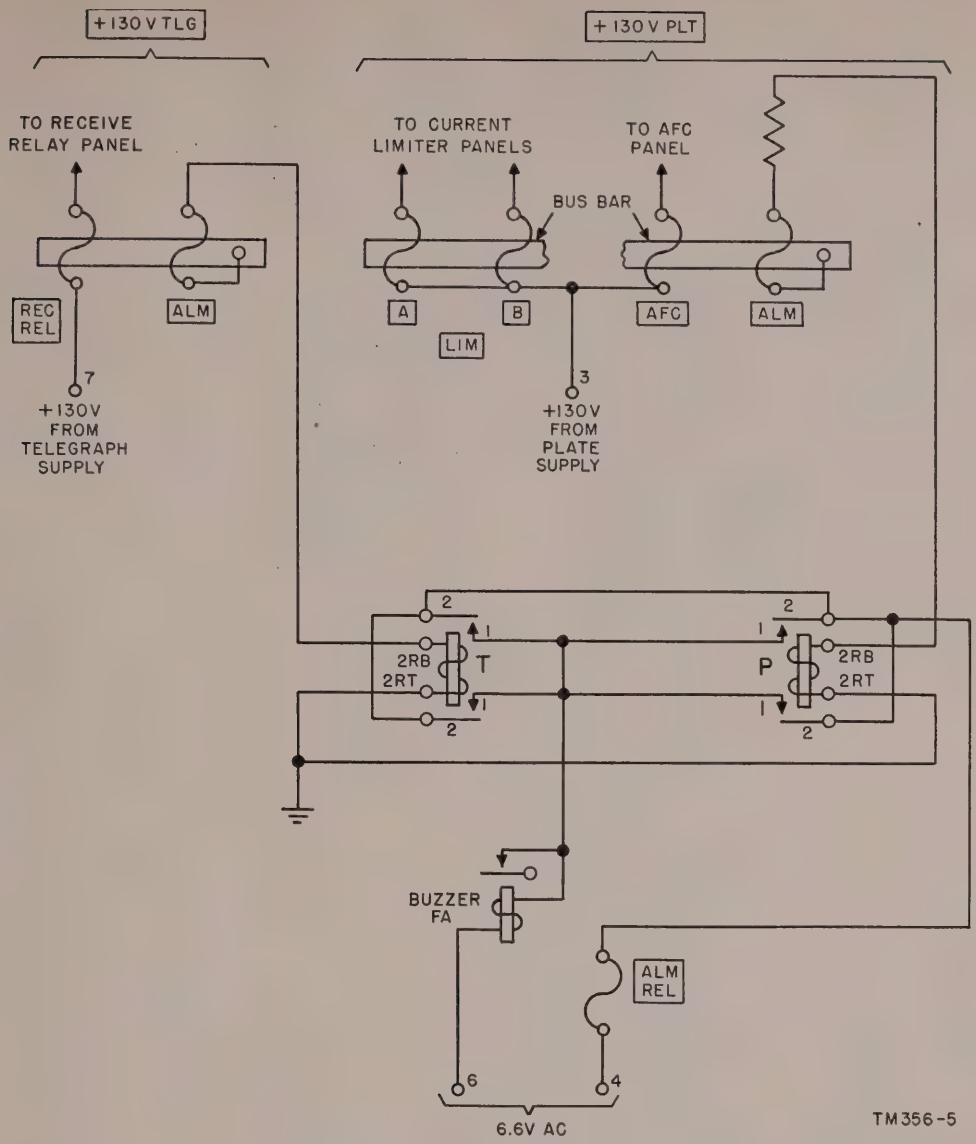

Figure 44. Plate and telegraph power supplies, fuse alarm circuit, schematic diagram.

b. The power supply consists of a full-wave rectifier circuit (par. 90), a grid bias circuit to regulate the output voltage of the full-wave rectifier circuit (par. 91), and a time-delay circuit to protect the rectifier tubes from damage (pars. 92 and 93). The AN/FGC–1C contains a relay in the 130-volt telegraph supply (par. 23) that functions to protect the electrolytic capacitors in the power supply filter circuit (par. 90*e* and *f*).

90. Full-wave Rectifier Circuit, Power Supply PP–737/FGC–1 or PP–763/FGC–1X

a. The power supply circuit (figs. 46 and 47) may be arranged for operation from either 103 to 127 or from 207 to 253 volts ac. When the operation is from 103- to 127-volt circuits, the two primary windings of power transformer T1 are connected in parallel at terminal board AC. When the operation is from 207- to 253-volt circuits, the two primary circuits are connected in series. A designation plate, mounted at the base of terminal board AC, illustrates the connections to be made when the a-c supply voltage is 103 to 127 or 207 to 253 volts.

b. When a-c power is applied to the AN/FGC–1(*), the current path is through the contacts of cover switch S1 (which is closed when the rectifier cover is securely in place), through fuse AC1 to terminal 1 on terminal board AC, and through the primary windings of transformer T1. The circuit continues through terminal 3 on terminal

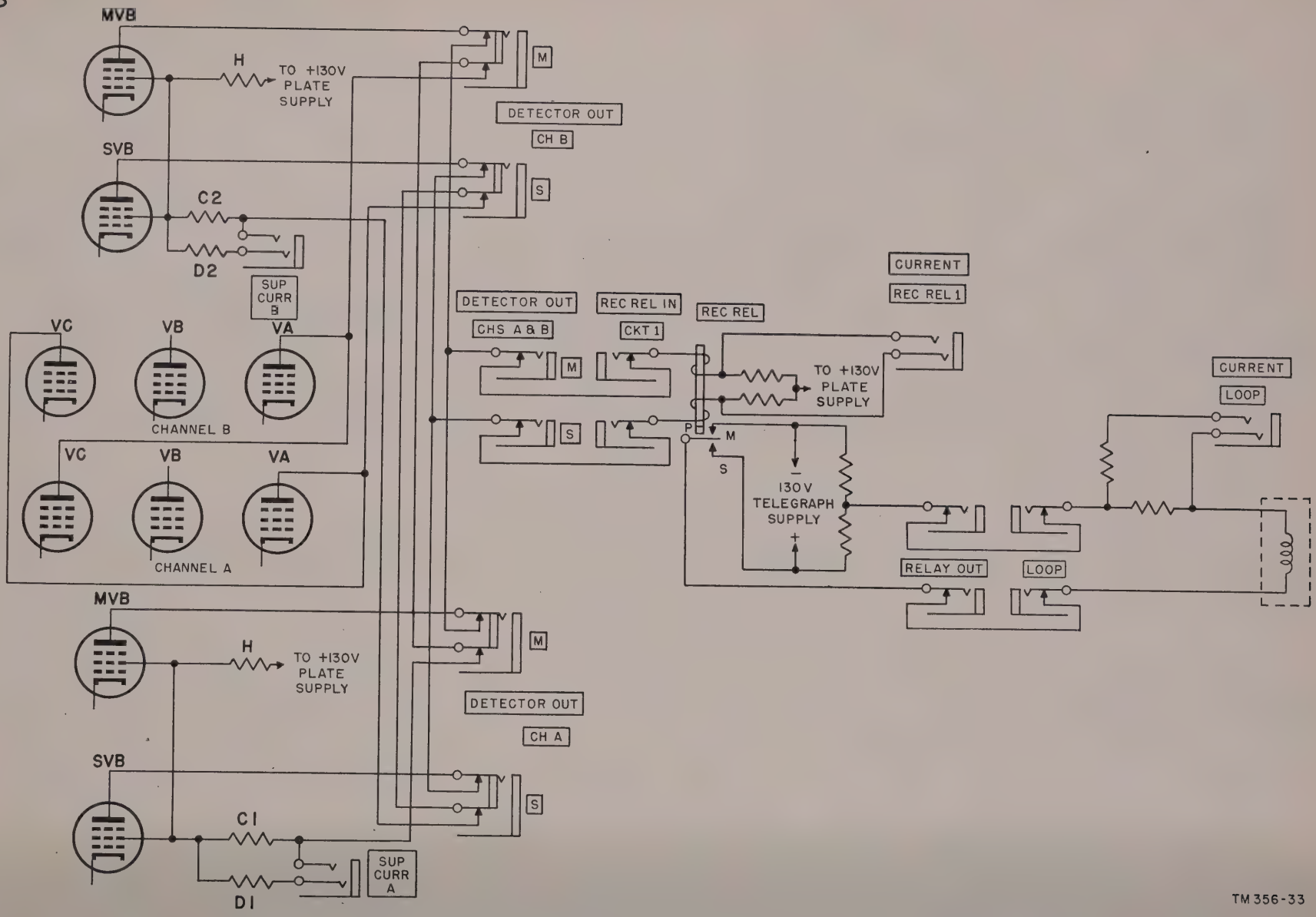

Figure 45. Simplified schematic diagram showing the circuit arrangement of the more commonly used jacks.

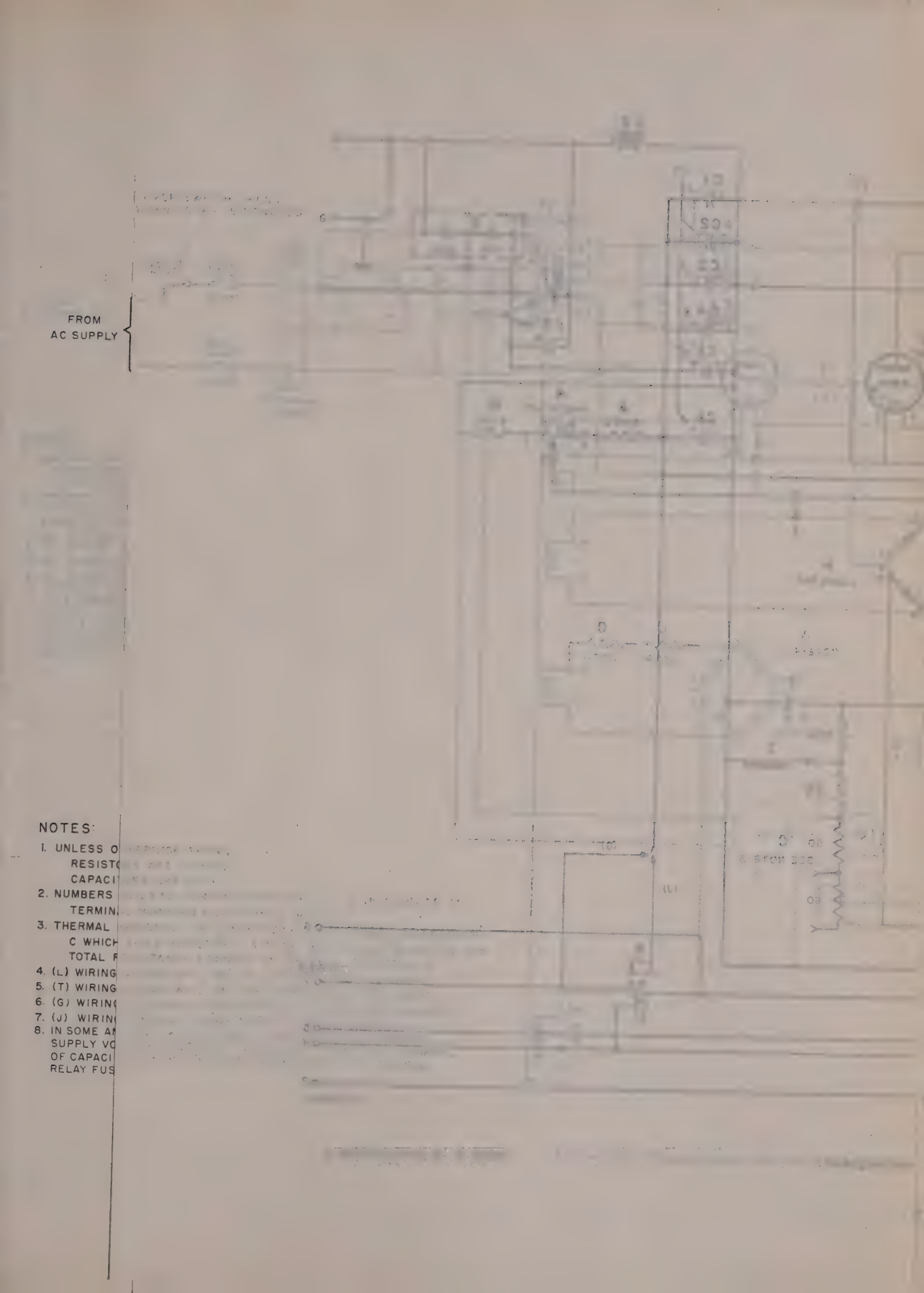

NOTES:

1. UNLESS O
   RESISTO
   CAPACI
2. NUMBERS
   TERMIN
3. THERMAL
   C WHICH
   TOTAL F
4. (L) WIRING
5. (T) WIRING
6. (G) WIRING
7. (J) WIRIN
8. IN SOME AI
   SUPPLY VO
   OF CAPACI
   RELAY FUS

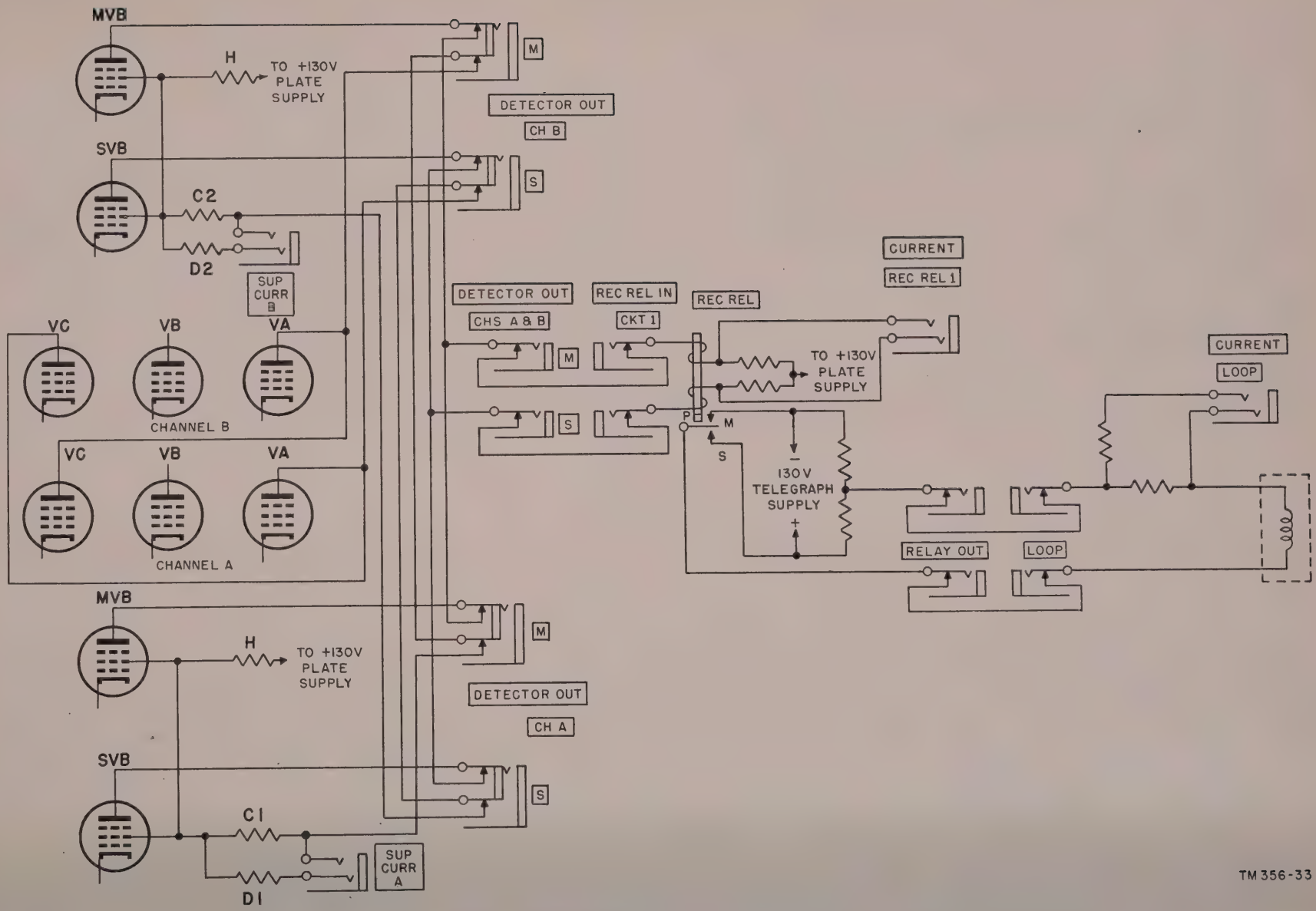

Figure 45. Simplified schematic diagram showing the circuit arrangement of the more commonly used jacks.

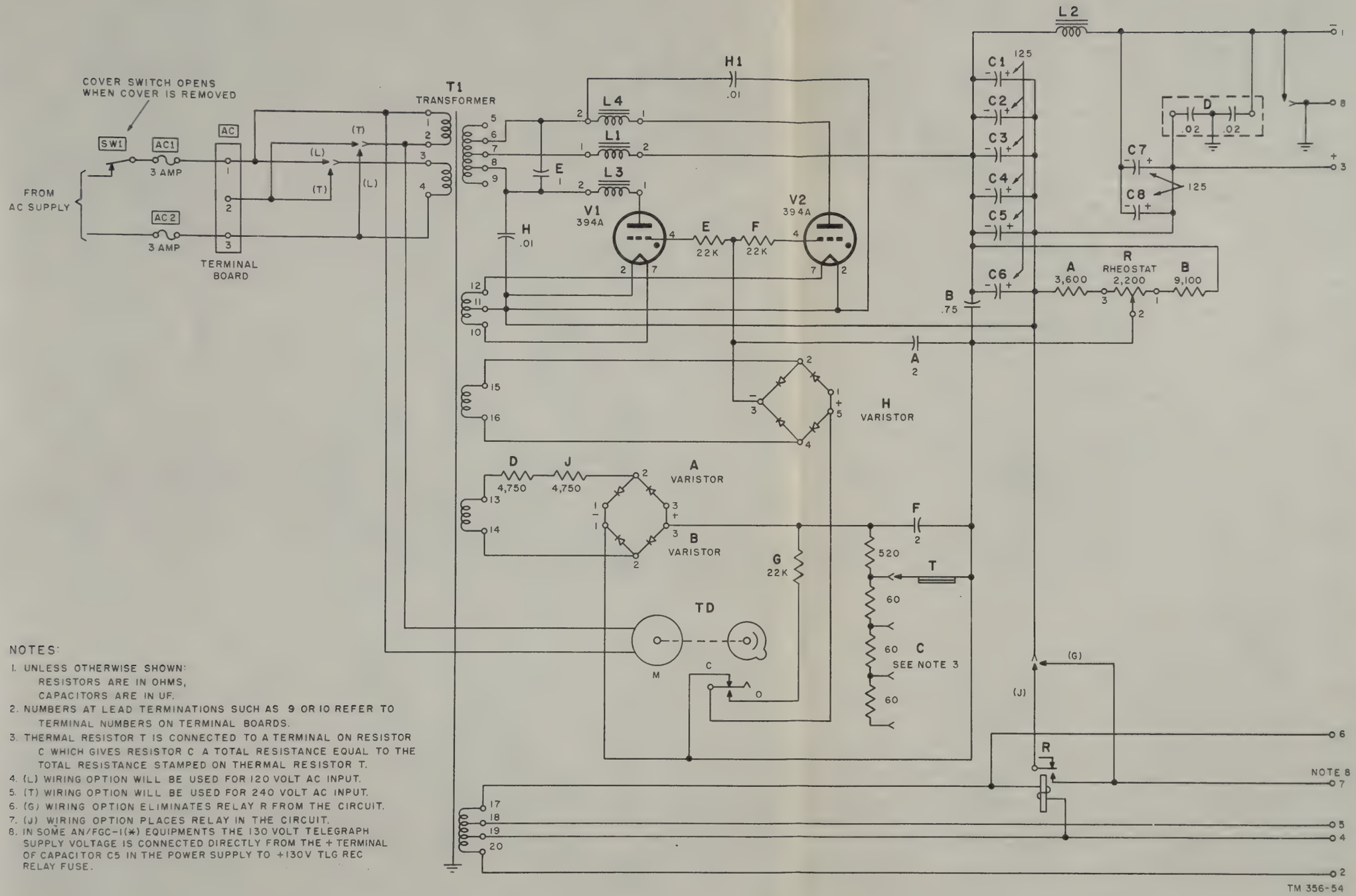

NOTES:

1. UNLESS OTHERWISE SHOWN: RESISTORS ARE IN OHMS, CAPACITORS ARE IN UF.
2. NUMBERS AT LEAD TERMINATIONS SUCH AS 9 OR 10 REFER TO TERMINAL NUMBERS ON TERMINAL BOARDS.
3. THERMAL RESISTOR T IS CONNECTED TO A TERMINAL ON RESISTOR C WHICH GIVES RESISTOR C A TOTAL RESISTANCE EQUAL TO THE TOTAL RESISTANCE STAMPED ON THERMAL RESISTOR T.
4. (L) WIRING OPTION WILL BE USED FOR 120 VOLT AC INPUT.
5. (T) WIRING OPTION WILL BE USED FOR 240 VOLT AC INPUT.
6. (G) WIRING OPTION ELIMINATES RELAY R FROM THE CIRCUIT.
7. (J) WIRING OPTION PLACES RELAY IN THE CIRCUIT.
8. IN SOME AN/FGC-1(*) EQUIPMENTS THE 130 VOLT TELEGRAPH SUPPLY VOLTAGE IS CONNECTED DIRECTLY FROM THE + TERMINAL OF CAPACITOR C5 IN THE POWER SUPPLY TO +130V TLG REC RELAY FUSE.

FIGURE 46.—*Power Supply PP-737/FGC-1, schematic diagram.*

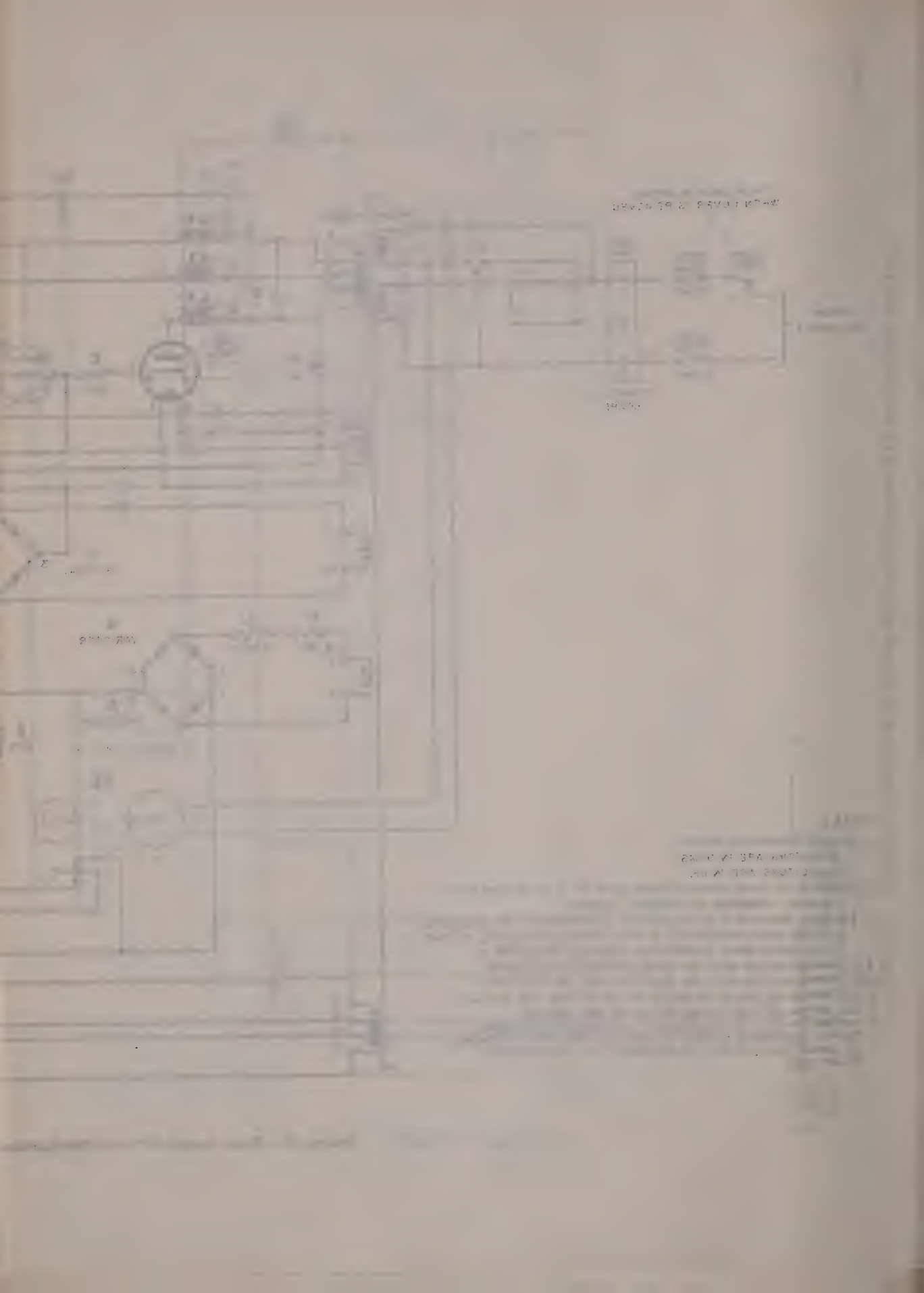

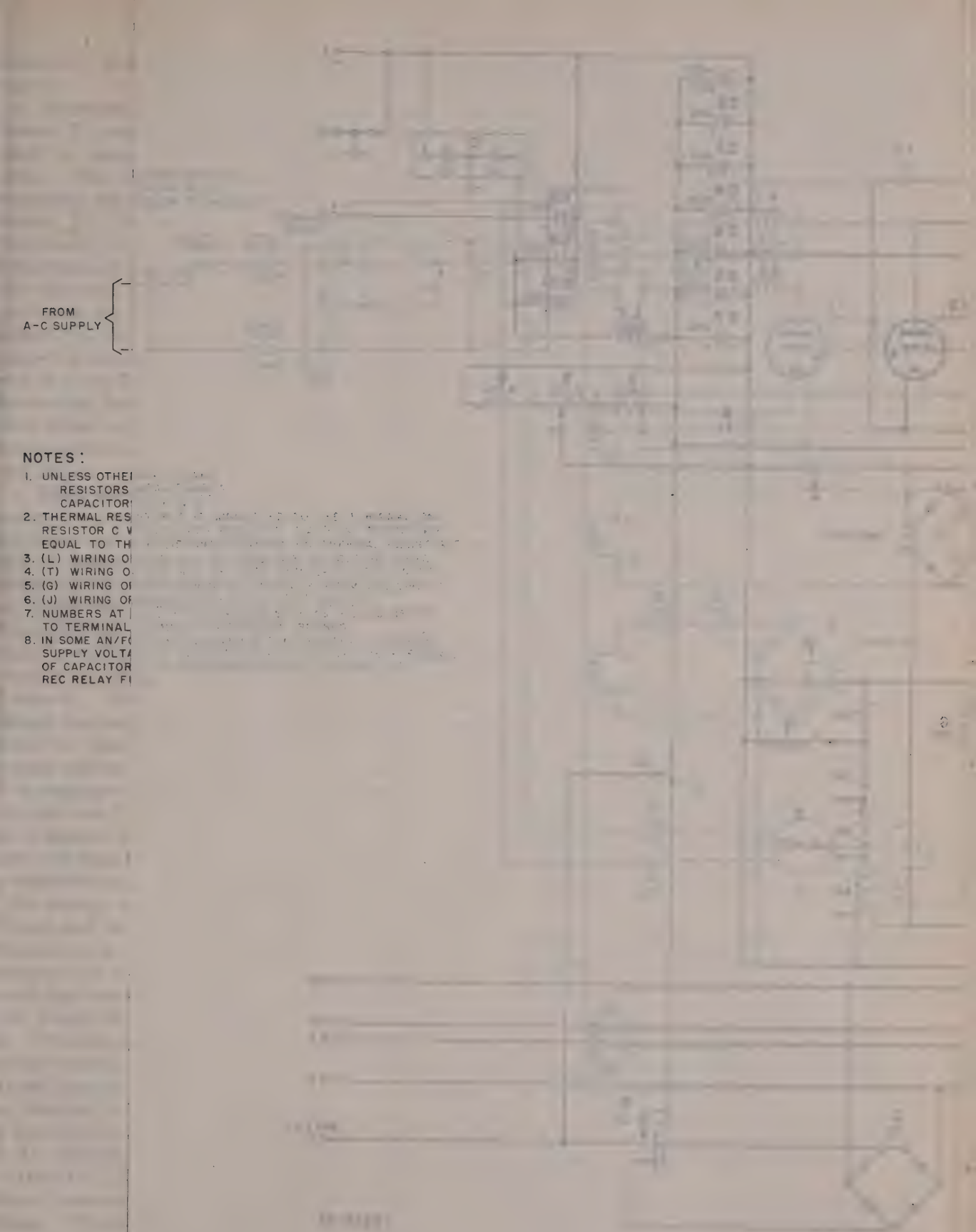

NOTES :

1. UNLESS OTHEI
   RESISTORS
   CAPACITOR
2. THERMAL RES
   RESISTOR C W
   EQUAL TO TH
3. (L) WIRING O
4. (T) WIRING O
5. (G) WIRING O
6. (J) WIRING O
7. NUMBERS AT
   TO TERMINAL
8. IN SOME AN/F
   SUPPLY VOLTA
   OF CAPACITOR
   REC RELAY F

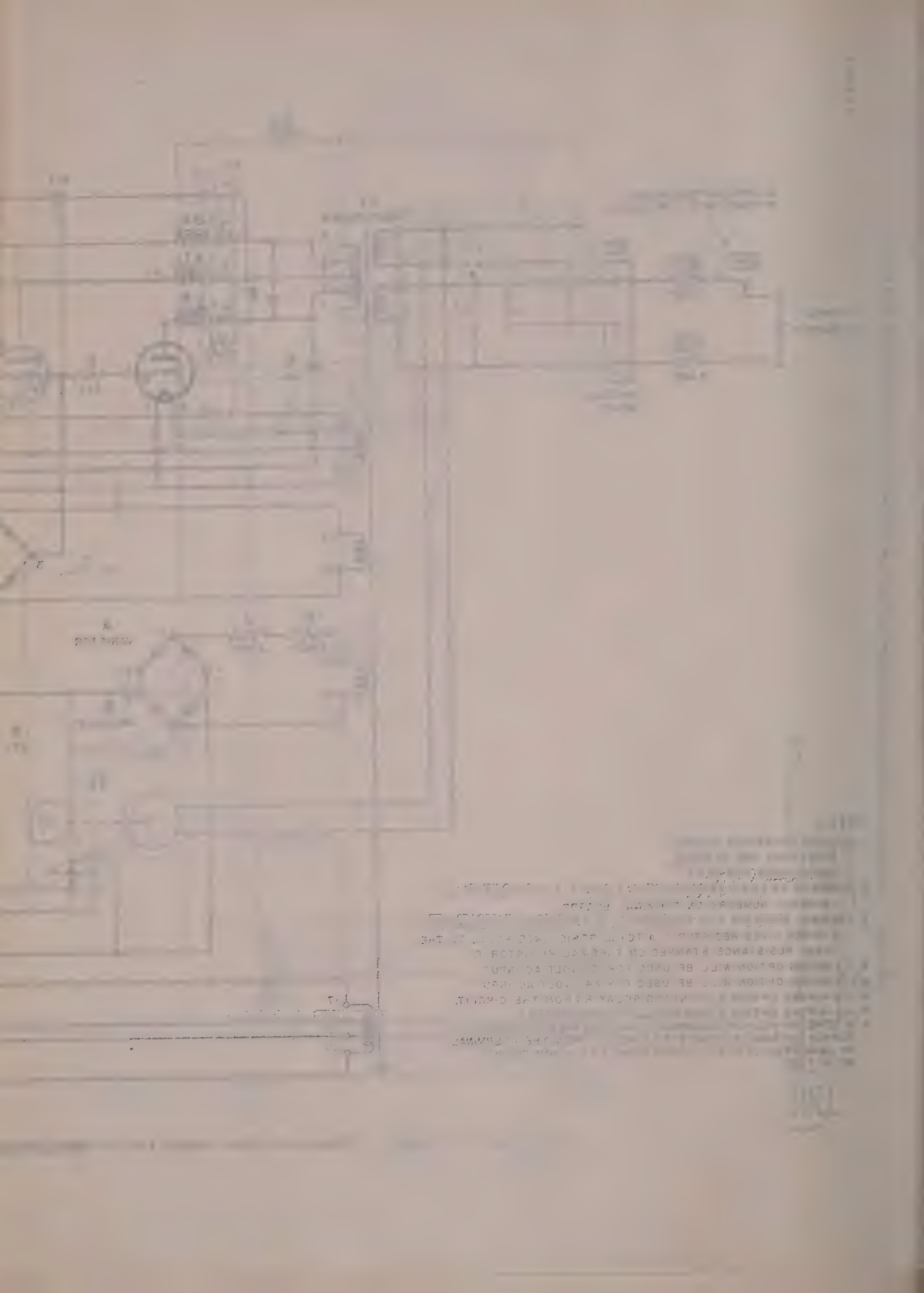

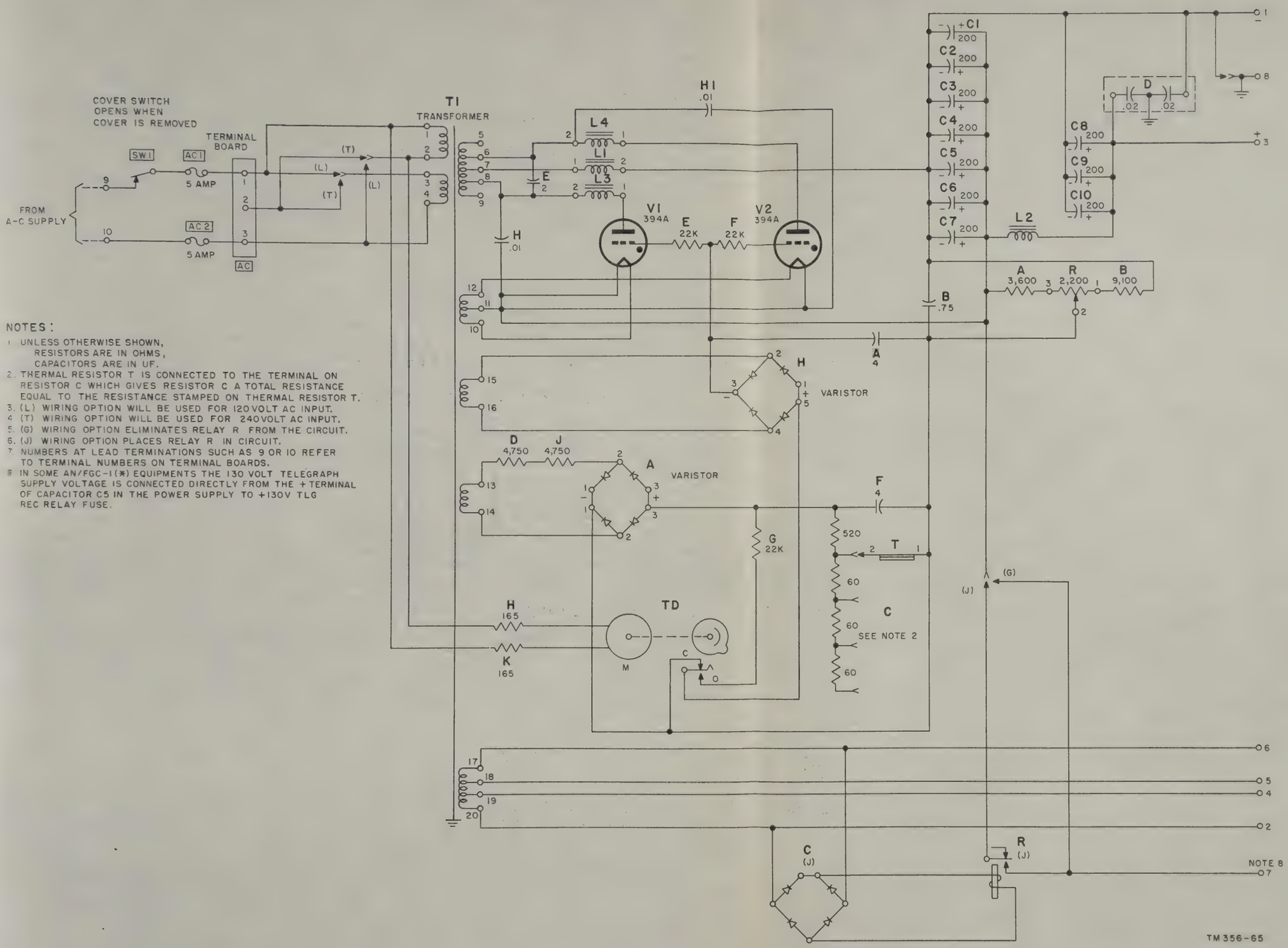

NOTES:

1. UNLESS OTHERWISE SHOWN, RESISTORS ARE IN OHMS, CAPACITORS ARE IN UF.
2. THERMAL RESISTOR T IS CONNECTED TO THE TERMINAL ON RESISTOR C WHICH GIVES RESISTOR C A TOTAL RESISTANCE EQUAL TO THE RESISTANCE STAMPED ON THERMAL RESISTOR T.
3. (L) WIRING OPTION WILL BE USED FOR 120 VOLT AC INPUT.
4. (T) WIRING OPTION WILL BE USED FOR 240 VOLT AC INPUT.
5. (G) WIRING OPTION ELIMINATES RELAY R FROM THE CIRCUIT.
6. (J) WIRING OPTION PLACES RELAY R IN CIRCUIT.
7. NUMBERS AT LEAD TERMINATIONS SUCH AS 9 OR 10 REFER TO TERMINAL NUMBERS ON TERMINAL BOARDS.
8. IN SOME AN/FGC-1(*) EQUIPMENTS THE 130 VOLT TELEGRAPH SUPPLY VOLTAGE IS CONNECTED DIRECTLY FROM THE + TERMINAL OF CAPACITOR C5 IN THE POWER SUPPLY TO +130V TLG REC RELAY FUSE.

FIGURE 47.—*Power Supply PP-763/FGC-1X, schematic diagram.*

220707 O - 52 (Face p. 60) No. 2

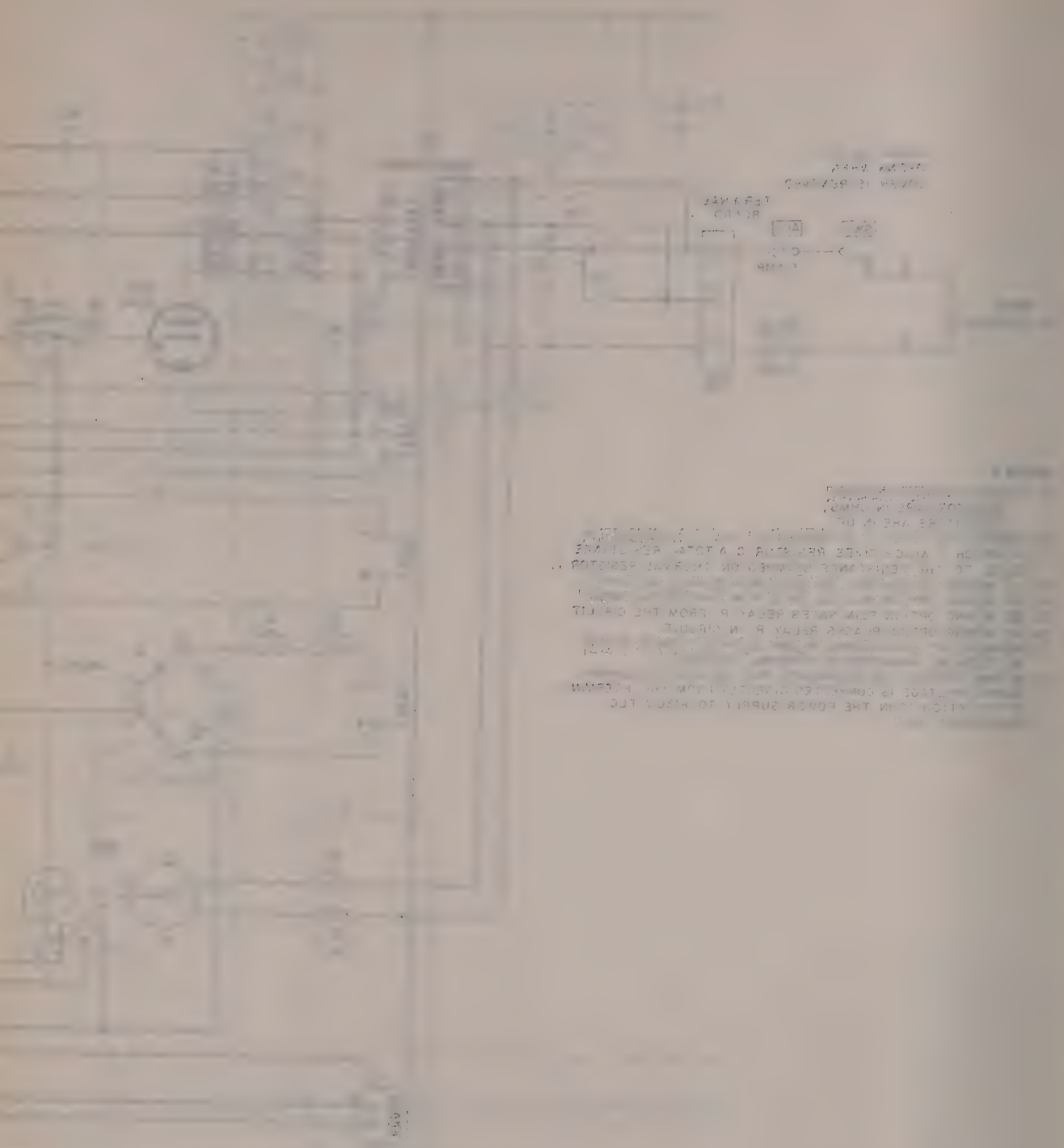

board AC, and through fuse AC2 to the power source.

c. Secondary windings 6–7 and 7–8 of transformer T1 supply positive plate voltage alternately to tubes V1 and V2 during each a-c input cycle. The filaments are heated directly by secondary windings 10–11 and 11–12 of transformer T1. Tubes V1 and V2 are gas-filled (thyratron), three-element rectifier tubes. One tube conducts during the positive half-cycle, and the other tube conducts during the negative half-cycle *of the a-c input voltage*. Terminal 7 of transformer T1, the center tap of winding 6–8, is connected through the rectifier load to the cathodes of tubes V1 and V2. Current flow through the rectifier load circuit is in the same direction when either tube conducts. Therefore, a full-wave rectified output voltage is produced in the load circuit.

d. When terminal 8 of transformer T1 becomes positive, the plate of tube V1 becomes positive and causes current to flow through the tube. The path of current flow is from terminal 7 of transformer T1, through reactor L1, to the negative side of the bank of filter capacitors, to terminal 1 of terminal board B, and through the rectifier load circuit to terminal 3 of terminal board B. The circuit continues through reactor L2 to the cathode of tube V1. The current flows from the cathode through the ionized gas to the plate of the tube. From the plate of the tube, the current flows through reactor L3 to terminal 8 of transformer T1 to complete the circuit. During the half-cycle in which tube V1 is conducting, a negative potential is applied to the plate of tube V2 from terminal 6 of transformer T1, and causes tube V2 to be nonconducting. A half-cycle later, the polarity of the voltage on the plates of the two tubes is reversed and tube V2 conducts while tube V1 is nonconducting. The path of current flow is from terminal 7 of transformer T1, through the same circuit that was followed during the previous half-cycle, except that the current flows through tube V2. From the plate of tube V2, the current flows through reactor L4 to terminal 6 of transformer T1, and completes the circuit.

e. Reactors L1 and L2, electrolytic capacitors C1 through C6, and electrolytic capacitors C7 and C8 (C1 through C7 and C8 through C10 in the PP–763/FGC–1X) form a two-section filter to remove pulsations from the +130-volt supply voltage. The positive telegraph supply voltage is connected to the positive terminal of capacitor C5. This connection is between the two filter sections. The plate voltage supply for the tubes is taken from a point beyond the second filter section which consists of reactor L2 and capacitors C7 and C8 (C8, C9, and C10 in the PP–763/FGC–1X). The purpose for this separation of the plate voltage and telegraph voltage supplies is to prevent noises in the telegraph circuit from interfering with the plate supply and to achieve better regulation of the plate supply.

f. The constant voltage in the output of the power supply is accomplished through the use of large electrolytic capacitors across the output terminals. Capacitors C1 through C8 in Power Supply PP–737/FGC–1 have a total capacitance of 1,200 microfarads. Capacitors C1 through C10 in Power Supply PP–763/FGC–1X have a total capacitance of 2,000 microfarads. The discharge circuit for these capacitors is through the output load (AN/FGC–1(*) plate supply circuits and the telegraph loop circuit). The charge circuit is through tubes V1 and V2 of the power supply. The discharge circuit resistance is high compared with the resistance of the charge circuit. Therefore, capacitors C1 through C8 (C1 through C10 in the PP–763/FGC–1X) charge rapidly and discharge slowly.

g. Secondary winding 17–19 of transformer T1 supplies 6.6 volts ac to the AN/FGC–1(*) tube filaments and to the winding of relay R.

h. Power Supply PP–737/FGC–1, when used in the AN/FGC–1C model, is equipped with relay R in the lead that supplies positive telegraph voltage to the loop circuit. Relay R is operated when the a-c line voltage is applied to the power supply. A failure in the a-c line voltage will cause relay R to release and open the lead to the loop circuit.

91. Regulation of Output Voltage of Power Supplies PP–737/FGC–1 and PP–763/FGC–1X

Variations in the output voltage of a power supply may result from variations in the a-c input voltage or from variations in the power supply load. Power Supplies PP–737/FGC–1 and PP–763/FGC–1X contain circuits which compensate for load or input variations so that the output voltage remains practically constant.

a. General.

(1) Regulation of the output voltage of the power supply is achieved by controlling the grid bias on tube V1 or V2. During

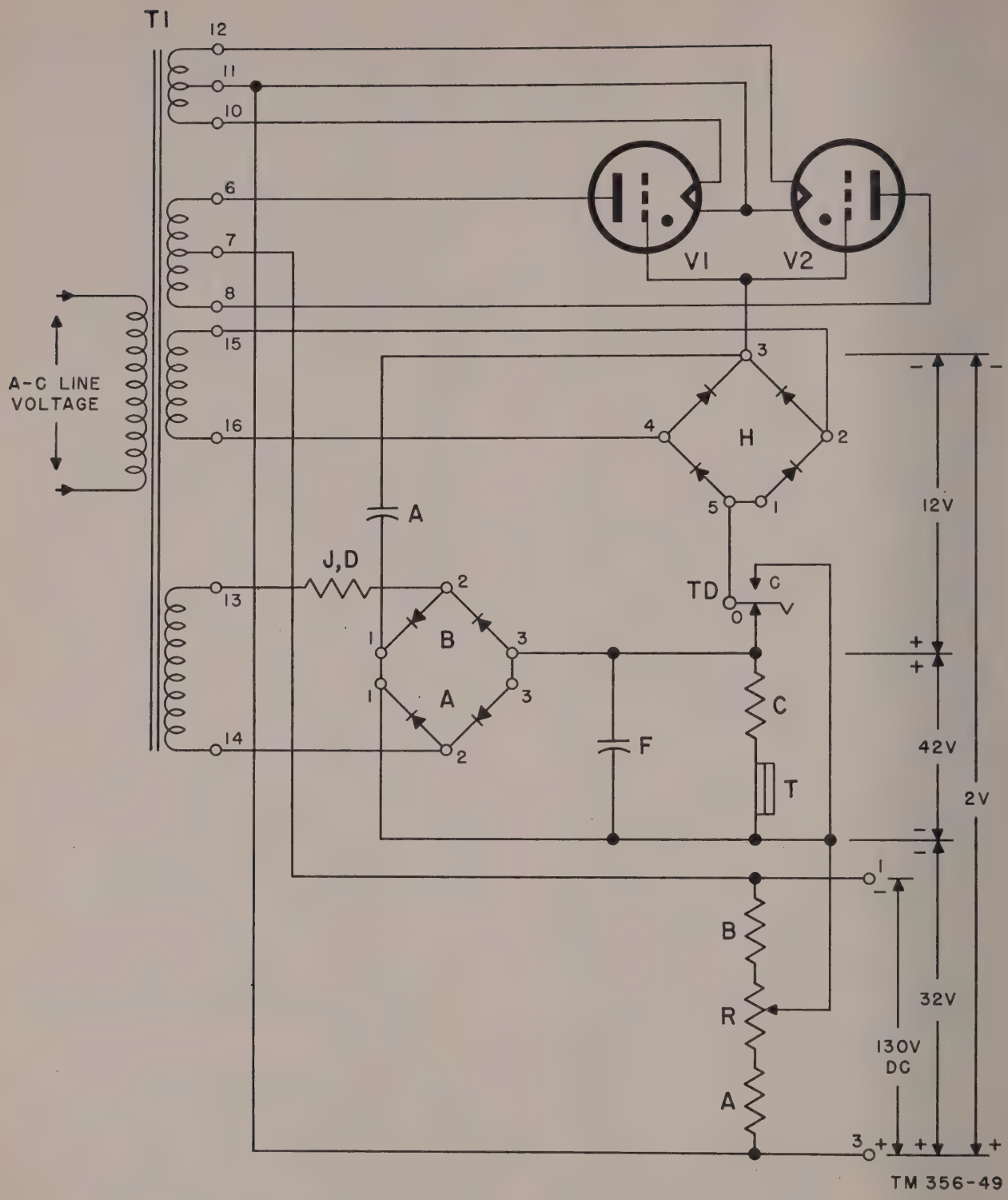

Figure 48. Partial schematic diagram of power supply, grid biasing circuit.

normal operation of the power supply, the grids of rectifier tubes V1 and V2 are maintained at a potential 2 volts more negative than the cathode potentials. If the grids are made less negative with respect to the cathodes, the tubes will fire earlier in the half-cycle of a-c input, and the output power of tubes V1 and V2 will increase. If the grids are made more negative with respect to the cathodes, the tubes will fire later in the half-cycle of a-c input, and their output power will decrease. The output voltage of the power supply is the charge built up across the filter (par. 90*f*). The output voltage of the power supply depends, therefore, on the fraction of the half-cycle during which tubes V1 and V2 conduct. The size of this fraction is controlled by the grid bias.

(2) At light loads, it is not necessary for tubes V1 and V2 to fire every cycle since the electrolytic capacitors in the filter may supply current to the load for a few cycles. During this time the grid bias is sufficient to prevent firing of the tubes. When the output voltage (across the filter) decreases below the regulated value, the tubes fire again and recharge the capacitors.

b. Grid Bias. The grid bias is the result of the addition of three voltages, one of which opposes the other two. These voltages are developed across varistor H, across resistor C and thermal resistor T, and across resistor A and part of variable resistor R (figs. 46, 47, and 48). The method used to develop these voltages is described in *c* through *e* below.

c. Adjustable Voltage.

(1) Resistors A and B and variable resistor R (which are in parallel with the filter) form a potentiometer across the output of the power supply (fig. 48). The bottom end of resistor A is connected to the cathodes of tubes V1 and V2. The bottom end of resistor A is thus the high-potential end of resistor A.

(2) The potential of the sliding contact of variable resistor R is lower (more negative) than the potential of the cathodes of tubes V1 and V2. Normally, the sliding contact is 32 volts more negative than cathode potential.

(3) Voltage regulation to compensate for changing loads is accomplished as follows: If the d-c output voltage of the power supply increases (because of decreased load) the current through resistor A and variable resistor R will increase, and the potential of the sliding contact on variable resistor R will become more than 32 volts negative with respect to the cathodes of tubes V1 and V2. Conversely, if the d-c output voltage of the power supply decreased (because of increased load), the sliding contact on variable resistor R will become less negative with respect to the cathodes of tubes V1 and V2.

d. Reference Voltage.

(1) Varistors A and B are arranged to form a full-wave rectifier (fig. 48). Winding 13–14 of transformer T1 applies ac to the rectifier. The d-c output is taken from terminals 1 and 3 of the varistors. Terminal 1 is negative with respect to terminal 3.

(4) The potential difference between the lower end of thermal resistor T and the upper end of resistor C (fig. 48) is maintained at 42 volts. The polarity of this potential opposes the 32-volt potential developed across resistor A and variable resistor R (*c* above). Since the lower end of thermal resistor T is connected to the sliding contact of variable resistor R, the upper end of resistor C is at a potential 10 volts more positive than the lower end of resistor A.

e. Fixed Voltage.

(1) Varistor H is a full-wave rectifier. Winding 15–16 of transformer T1 applies ac to terminals 2 and 4 of the varistor. The 12-volt d-c output of varistor H is taken from terminals 3 and 5. Terminal 3 is negative, and terminal 5 is positive. This polarity opposes the 10-volt potential developed across thermal resistor T and resistor C and across resistor A and variable resistor R (*d*(3) above). The resultant voltage difference between the cathodes of tubes V1 and V2 and the top of varistor H is 2 volts. Terminal 3 of varistor H is connected to the grids of tubes V1 and V2. Thus, the grids are biased 2 volts negative with respect to the cathode.

(2) The d-c output of varistors A and B is applied across resistor C and thermal resistor T, which are in series. If the a-c line voltage should increase, the increase would be induced in winding 13–14 of transformer T1 and would result in an increase in the current through the varistors and through resistor C and thermal resistor T. An increase in current through thermal resistor T causes a decrease in potential across its terminals. The same increase in current through resistor C would cause an increase in potential across its terminals. Resistor C and thermal resistor T are selected so that the increase in potential across one compensates for the decrease in potential across the other, and the total potential across both remains constant regardless of the current through them.

(3) Resistors J and D are in series with varistors A and B, thermal resistor T, and resistor C. Varying current through resistors T and C cause a varying potential drop across resistors D and J. The voltage variations across resistors D and J equal the variations across winding 13–14 of transformer T1. Thus, the total potential drop across resistors D, J, C, and thermal resistor T equals the voltage drop across winding 13–14 of transformer T1, but the voltage across resistor C and thermal resistor T remains constant.

(2) Voltage regulation to compensate for a-c line voltage variations is accomplished as follows: A change in a-c line voltage would cause a change in the d-c output potential of varistor H. The change in output of varistor H changes the grid bias of tubes V1 and V2. The magnitude and polarity of the bias change compensates for the change in plate voltage because of line voltage variation.

92. Timer TD, Application

a. The function of timer TD is to prevent damage to the power supply tube filaments when power first is applied to the equipment. Timer TD prevents the tubes from firing until the filaments have heated sufficiently to prevent arcing between the plate and the cathode.

b. Timer TD performs its function by maintaining the grid potential of tubes V1 and V2 beyond cutoff until the filaments have heated.

c. When power first is applied to the AN/FGC–1(*), contact C of timer TD (figs. 46, 47, 48) is closed. With contact C closed, a negative (with respect to cathode) voltage from the sliding tap of variable resistor R is applied directly to the positive side of varistor H (terminal 3). The negative side of varistor H is connected to the grids of tubes V1 and V2. (Note that the opposing voltage developed across resistor C and thermal resistor T is not part of the grid circuit when contact C of timer TD is closed.) A negative 44-volt bias is applied to the grids of tubes V1 and V2 when contact C of timer TD is closed. This bias prevents tubes V1 and V2 from firing.

d. Operation of timer TD opens contact C and closes contact O. Closing contact O places the 42-volt reference voltage in the grid circuit. Since the reference voltage is of opposite polarity to the other biasing voltages, the resulting bias on the grids is a negative 2 volts. This bias permits the tubes to fire.

93. Timer TD, Detailed Operation

Timer TD may be either an electronic timer or an adjustable reset timer (par. 23). Power Supply PP–737/FGC–1 when used in the AN/FGC–1 models contains an electronic timer. Power Supply PP–737/FGC–1 when used in the AN/FGC–1C models and Power Supply PP–763/FGC–1X contain adjustable reset timers.

a. Operation of Electronic Timer TD. Electronic timer TD consists of two relays: a thermal relay K2, and a slave relay K1 (fig. 61).

(1) Thermal relay K2 is connected across terminals 1 and 2 of the primary of transformer T1. When power is applied to the primary of transformer T1, current flows through the heating coil of relay K2. The circuit is from terminal 2 of transformer T1, through the heating coil of relay K2, and through contact 3 of relay K2 to contacts 6–7 of relay K1. The circuit then returns to terminal 1 of the transformer.

(2) After approximately 20 seconds, the bimetallic armature of relay K2 heats and operates, closing contacts 7–5. Closing contacts 7–5 of relay K2 completes the circuit from the primary of transformer T1 through the winding of relay K1, and energizes relay K1.

(3) When relay K1 is energized, contacts 6–7 relay K1 open, and contacts 6–8 close. Closing contacts 6–8 completes a holding circuit for relay K1. Relay K1 will remain operated until the a-c power is removed from the primary of transformer T1, or until the line voltage falls below 75 volts.

(4) When relay K1 is energized, contacts 2–3 open and contacts 1–2 close. Closing contacts 1–2 of relay K2 places the reference voltage in the grid biasing circuit (par. 91*d*).

(5) Opening contacts 6–7 of relay K1 ((3) above) opens the circuit through the relay K2 winding and permits the winding to cool.

(6) If, after a power interruption, power is restored before relay K2 has cooled fully, the operating time delay will be shortened. No damage will result from the shortened delay because the tube filaments will be warm and will reheat to operating temperature within the shortened time-delay period.

b. Operation of Adjustable Reset Timer TD. Adjustable reset timer TD (figs. 46 and 47) consists of a small motor and a switch. The switch is operated by an arm projecting from a disk mounted on the motor shaft.

(1) The motor is connected across terminals 1 and 2 of the primary of transformer T1. When power is applied to the primary of transformer T1, the motor shaft turns slowly, until the arm on the disk reaches and operates the switch. The switch is operated 14 to 17 seconds after power is applied to the motor. The motor holds the switch operated until power is removed from the motor.

(2) A helical torsion spring, which becomes tensed by the turning of the motor shaft, returns the disk and motor shaft to the preoperated position after power is removed from the motor.

(3) The time interval between application of power to the motor and operation of the switch may be adjusted by positioning the switch-operating arm at various points on the outer edge of the disk.

94. Disk-Type Rectifier (If Provided)

The disk-type rectifier is used to supply positive 130 volts for the loop circuit and monitor circuit relays when a ground return is used in the loop. Instructions for installing the disk-type rectifier are given in paragraph 38.

a. The disk-type rectifier circuit is shown in figure 49. It is a full-wave selenium-disk rectifier for changing nominal 115- or 230-volt, 25 to 60 cycle, a-c supply into 130±3 volts d-c, with a maximum current output of .24 ampere.

b. The voltage applied to transformer T is controlled by switch S4. Switch S4 is a single-pole, double-throw switch that permits the rectifier to operate from either 115- or 230-volt a-c supply voltage. When switch S4 is in the 115 V position,

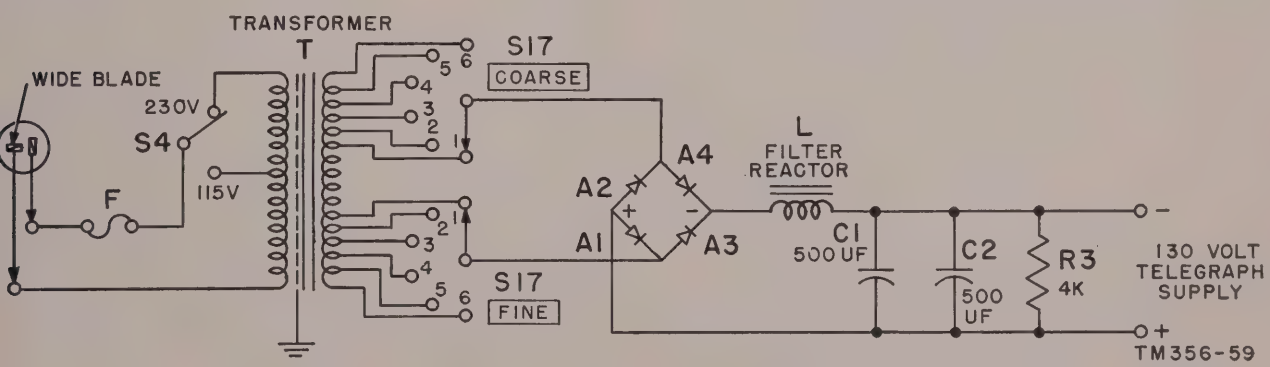

Figure 49. Disk-type rectifier, schematic diagram.

the a-c power supply voltage is applied to the lower portion of the primary winding of transformer T (fig. 49). In the 230 V position, the a-c power supply voltage is applied to the total winding. The path of current flow from the a-c line is through fuse F to switch S4, through the primary winding of transformer T, and back to the a-c source.

c. Six course voltage adjustment taps are located on one end of the secondary winding of transformer T. Six fine voltage adjustment taps are located on the opposite end of the secondary winding of transformer T. The coarse voltage adjustment taps are separated by a large number of secondary turns. A comparatively large voltage is developed between the coarse voltage adjustment taps. The fine voltage adjustment taps are separated by a small number of secondary windings; therefore, a comparatively small voltage is developed between the fine voltage adjustment taps. The coarse voltage adjustment taps are wired to multicontact switch S 17 COARSE. The fine voltage adjustment taps are wired to multicontact switch S 17 FINE. The output voltage of the rectifier is adjusted by the voltages selected by switches S 17 COARSE and S 17 FINE.

d. The secondary winding of transformer T furnishes approximately 170 volts a-c, through switches S 17 COARSE and S 17 FINE, to the varistor rectifiers A1, A2, A3, and A4. Approximately 130 volts dc is developed across the output of the full-wave bridge arrangement of selenium varistors A1 through A4. The output of the rectifier is filtered by reactor L and electrolytic capacitors C1 and C2. Resistor R3, bridged across the output terminals of the filter, is an artificial load for the rectifier. Resistor R3 prevents large changes in the output voltage when the load in the output circuit changes.

95. Terminal Box J–447/FGC–1 (Utility Outlet, and Heater Box)

a. A-c power is applied to the AN/FGC–1(*) through a four-conductor cord and plug which is part of Terminal Box J–447/FGC–1. A-c power is taken from the associated radio receiver (par. 33).

b. The J–447/FGC–1 contains four appliance convenience outlets, two rectifier outlets, and two heater sockets.

c. When the power switch of the radio receiver is in the ON position, and the radio receiver is not in operation, power is applied to the J–447/FGC–1 heater sockets, and convenience outlets. When the radio receiver is placed in operation, the circuit to the heaters is opened. The heaters are 50-watt incandescent light bulbs.

d. Front and rear views of Terminal Box J–447/FGC–1 are shown in figures 18 and 19. Wiring of the terminal box is shown in figure 60.

96. Under Voltage Alarm BZ–27/FGC–1 (Alarm and Miscellaneous Panel)

a. Front and rear views of Under Voltage Alarm BZ–27/FGC–1 appear in figures 18 and 19. Wiring of the panel appears in figure 60.

b. The operation and functions of buzzer FA and relays P and T are discussed in paragraph 87. The frequency indicating bell is discussed in paragraph 86*i*.

c. During tests, the resistors mounted on Under Voltage Alarm BZ–27/FGC–1 provide different values for full-scale deflection of the meter mounted on Signal Data Converter CV–205/FGC–1 (frequency indicator panel). The functions of the individual resistors are given in appendix II.

CHAPTER 5

FIELD MAINTENANCE INSTRUCTIONS

Note. This chapter contains information for field maintenance of Radioteletype Terminal Equipment AN/FGC–1(*). The amount of repair that can be performed by units having field-maintenance responsibility is limited only by the tools and test equipment available and by the skill of the repairman.

Section I. PREREPAIR PROCEDURES

97. Tools, Materials, and Test Equipment

Maintenance tools and materials required for performing the field maintenance procedures outlined in paragraphs 98 through 103 are listed in paragraph 1*b* and *c* of appendix II. The following test equipment is required:

Test equipment	Technical manual	Stock No.
Tube Tester I–177–( ).	11–2627	3F5700–177.
Multimeter TS–352/U.	USAF AN–16–3TS352–3.	3F4325–352.

98. Removal of Pluck-out Parts

a. Removing Tubes.

(1) All tubes other than the power supply tubes are mounted horizontally on the front panels of the AN/FGC–1(*). Remove the front cover of the power supply panel to gain access to the power supply tubes.

(2) Be sure that the tubes have cooled sufficiently before attempting to remove them from their sockets. Before removing the tubes from the power supply, remove the spring-connector clips from the tube caps. To remove the power supply tubes, depress the spring clips at the base of the tube, and lift the tube from its socket. Only power supply tubes have spring clips to hold them in their sockets.

(3) To remove a tube other than a power supply tube, pull it outward from its socket. If a tube does not release easily, rock the tube *gently*. Do not rock or jiggle the tube in its socket if it can be removed by a direct outward pull. Jiggling a tube in its socket during removal spreads the tube socket contacts. Label each tube as soon as it is removed so that it can be replaced later in its proper socket.

b. Removal of Thermal Relay K2 from Electronic Timer TD (If Provided). The electronic timer (par. 23*a*) in the power supply contains thermal relay K2, a pluck-out part. Remove the relay by pulling it gently from its socket.

c. Removing Fuses.

(1) Remove all power from the equipment before attempting to replace a fuse.

(2) Remove grasshopper fuses from the fuse panel by loosening the screws located at the ends of the fuses and sliding the fuse from underneath the screw head.

(3) Remove power supply fuse AC1 or AC2 by turning the fuseholder knob counterclockwise and removing the fuse and its holding sleeve from the fuseholder. Then extract the fuse from the holding sleeve.

d. Removing Lamps. Two 50-watt incandescent lamps are located on Terminal Box J–447/FGC–1 (utility and outlet panel). Remove the lamps by unscrewing them from their sockets.

e. Removing Receive Relay.

(1) Two receive relays are mounted on the receive relay panel. Remove a receive relay by lifting the spring clip which extends from the panel to the relay cover (fig. 12). Grasp the relay and pull straight out from the panel.

(2) Remove the relay cover by holding the base of the relay in one hand and turning

the relay cover a few degrees counterclockwise. The cover will release and may be lifted from the relay.

(3) The relay cover may be removed from the relay without removing the relay from the panel. Lift the spring clip which extends from the panel to the front of the relay cover. Grasp the cover and turn it a few degrees counterclockwise. The cover will release and may be lifted from the relay.

99. Inspecting, Cleaning, and Testing Tubes

a. Cleaning. Clean the tubes with a cloth moistened with Solvent, dry-cleaning (SD); if necessary, clean the tube caps (in power supply) and prongs with crocus cloth.

b. Inspecting. Inspect the tubes for cracks in glass and base and for bent and broken prongs.

c. Testing. Test the tubes for proper emission, leakage, and short circuits. Use a tube tester.

100. Inspecting, Cleaning, and Testing Fuses

a. Inspecting. Inspect fuse ends for evidence of burning, corrosion, and looseness.

b. Cleaning. Clean fuse ends with emery cloth and wipe with a clean cloth. If a file is used to remove deep pits, use crocus cloth to leave a smooth contact surface and then wipe dry with a clean cloth.

c. Checking. Check fuses for continuity.

101. Inspecting Lamps

Inspect the HEAT lamps for continuity of filament. Make sure that the lamp base is not loose.

102. Cleaning and Inspecting Chassis

a. Cleaning. Thorough cleaning of the AN/FGC–1(*) is necessary to insure optimum performance by preventing corrosion, rust, and dust from damaging the parts or causing arc-over or low-resistance leakage between high-voltage points and ground. Remove loose dirt and dust with a brush or blower. With a brush or cloth moistened with solvent (SD), remove dirt and grease which adhere to the chassis and parts. Clean the switches with a small brush or pipe cleaner moistened with solvent (SD).

b. Inspecting. After a component has been thoroughly and carefully cleaned, make a visual inspection of parts and wiring for rust, corrosion, loose connections, frayed and burned insulation, loose screws, and burned and charred resistors and coils. Carefully inspect tube sockets for broken contacts, switches for loose and bent contacts and broken insulation, and terminal boards for broken lugs and signs of burning. Inspect and tighten all loose setscrews and knobs.

103. Replacement of Pluck-Out Parts

Replace the tubes, fuses, and lamps in the components of the AN/FGC–1(*) for which they were removed. Be sure the tubes are replaced in their correct sockets.

Section II. TROUBLE SHOOTING AND REPAIR AT FIELD MAINTENANCE LEVEL

Warning: When servicing the AN/FGC–1 (*), be extremely careful of the voltages exposed. Keep one hand in pocket when measuring socket voltages with the probe. Before touching any part after the voltage is shut off, short the part to ground.

104. Trouble-Shooting Procedures

a. General. The first step in servicing a defective AN/FGC–1 (*) is to sectionalize the fault (par. 73), which means tracing the fault to the circuit responsible for the abnormal operation of the AN/FGC–1 (*). The second step is to localize the fault, which means tracing the fault to the defective part responsible for the abnormal condition. Some faults such as burned-out resistors and shorted transformers often can be located by sight, smell, or hearing. The majority of faults, however, must be localized by checking voltage and resistance.

b. Component Sectionalization and Localization The tests listed in (1) through (5) below aid in isolating the source of trouble. To be effective, the procedure should be followed in the order given. Remember that the servicing procedure should cause no further damage to the AN/FGC–1 (*). First, trouble should be localized to a single stage or circuit. Then the trouble may be isolated within that stage or circuit by appropriate voltage, resistance, and continuity measurements. The service procedure is summarized as follows:

(1) *Visual inspection.* The purpose of visual inspection (par. 72) is to locate any

visible trouble. Through this inspection alone, the repairman frequently may discover the trouble or determine the stage in which the trouble exists. This inspection is valuable in avoiding additional damage to the equipment which might occur through improper servicing methods and in forestalling future failures.

(2) *Operational test.* The operational test (par. 108) is important because it indicates frequently the general location of trouble. In many instances, the information gained will determine the exact nature of the fault. In order to utilize this information fully, all symptoms must be interpreted in relation to one another.

(3) *Resistance and voltage measurements.* These measurements (par. 110) prevent further damage to the equipment from possible short circuits and help in isolating the particular part at fault.

(4) *Trouble-shooting chart.* The troubles listed in the trouble-shooting chart. (par. 109) will aid greatly in sectionalizing and localizing trouble.

(5) *Intermittent faults.* In all these tests, the possibility of intermittents should not be overlooked. If present, this type of trouble often may be made to appear by tapping or jarring the set. It is possible that the trouble is not in the equipment itself but in the installation, or the trouble may be due to external conditions. In this event, test the installation, if possible.

105. Trouble-Shooting Data

The references listed below will aid in the rapid location of faults.

Fig. No.	Description
14	Receiver Control C–948/FGC–1 (automatic frequency control panel), front view.
15	Receiver Control C–948/FGC–1 (automatic frequency control panel), rear view.
16	Signal Data Converter CV–205/FGC–1 (frequency indicator panel), front view.
17	Signal Data Converter CV–205/FGC–1 (frequency indicator panel), rear view.
9	Trigger Amplifier AM–591/FGC–1 (detector A panel), front view.
10	Trigger Amplifier AM–591/FGC–1 (detector B panel), front view.
11	Trigger Amplifier AM–591/FGC–1 (detector panel), rear view.
6	Current Regulator CN–164/FGC–1 (current limiter A panel), front view.
7	Current Regulator CN–164/FGC–1 (current limiter B panel), front view.
8	Current Regulator CN–164/FGC–1 (current limiter panel), rear view.
12	Telegraph Repeater TH–11/FGC–1 (receive relay panel), front view.
13	Telegraph Repeater TH–11/FGC–1 (receive (receive relay panel), rear view.
20	Jack strip, front view.
24	Power Supply PP–737/FGC–1, front view with cover removed.
57	Power Supply PP–737/FGC–1 (rectifier X61680B), wiring diagram.
58	Power Supply PP–763/FGC–1 (rectifier X61680C), wiring diagram.
60	Bay cabling diagram, including wiring of Terminal Box J–447/FGC–1 (utility outlet and heater panel) and fuse panel.
52	Current Regulator CN–164/FGC–1 (current limiter panel), wiring diagram.
56	Signal Data Converter CV–205/FGC–1 (frequency indicator panel), wiring diagram.
53	Trigger Amplifier AM–591/FGC–1 (detector panel), wiring diagram.
55	Receiver Control C–948/FGC–1 (automatic frequency control panel), wiring diagram.
54	Telegraph Repeater TH–11/FGC–1 (receive relay panel), wiring diagram.
46	Power Supply PP–137/FGC–1 (rectifier X61680B), schematic diagram.
46	Power Supply PP–763/FGC–1 (rectifier X61680C), schematic diagram.
32	Current Regulator CN–164/FGC–1 (current limiter panel), schematic diagram.
33	Trigger Amplifier AM–591/FGC–1 (detector panel), schematic diagram.
35	Telegraph Repeater TH–11/FGC–1 (receive relay panel), schematic diagram.
41	Signal Data Converter CV–205/FGC–1 (frequency indicator panel), schematic diagram.
39	Receiver Control C–948/FGC–1 (automatic frequency control unit), schematic diagram.
49	Disk-type rectifier (KS–5844), schematic diagram.
61	Radioteletype Terminal Equipment AN/FGC–1C, complete schematic diagram.
62	Capacitor color code.
63	Resistor color code.
Par. 110	Voltage and resistance measurements.

106. Test Equipment Required For Trouble Shooting

The test equipment required for trouble shooting and the associated technical manuals are listed below:

Test Equipment	Technical manual	Sig C stock No.
Tube Tester I–177–( ).	11–2627	3F5700–177.
Test Set I–181–( )	11–2636	3F4181.
Test Set I–193–( )	11–2513	3F4193A.
Multimeter TS–352/U.	USAF AN–16–3TS352–3.	3F4325–352.
Oscilloscope OS–8A/U.	NAVSHIPS 91,272	

107. General Precautions

Whenever the AN/FGC–1(*) is serviced, observe the following precautions:

a. Be careful when the unit is exposed; high voltages are present.

b. Careless replacement of parts often makes new faults inevitable. Note the following points:

(1) Before a part is unsoldered, note the position of the leads. If the part, such as a transformer, has a number of connections, tag each lead.

(2) Be careful not to damage other leads when pulling or pushing them out of the way.

(3) Do not allow drops of solder to fall into the equipment; they may cause short circuits.

(4) A carelessly soldered connection may create a new fault. It is important to make well-soldered joints; a poorly soldered joint is one of the most difficult faults to find.

108. Operational Test

If the AN/FGC–1(*) is in normal operation, operate the equipment as described in the performance checklist (par. 75). This checklist is important because it frequently indicates the general location of trouble. Listen for crackling or buzzing noises which indicate high-voltage arcing. Check the AN/FGC–1(*) for smoke and the odor of burned or overheated parts.

109. Trouble-shooting Chart

The chart below is furnished as an aid in locating trouble in the AN/FGC–1(*) and lists the symptoms which the repairman can observe, either by sight or by sound, while making a few simple tests. Once the trouble has been localized to a stage or circuit, a tube check and voltage and resistance measurements of this stage or circuit ordinarily should be sufficient to isolate the defective part.

Symptom	Probable trouble	Corrective action
1. Operate the main power switch on the radio receiver to the ON position. HEAT lamps do not light.	*a.* Defective lamps	*a.* Replace lamps.
	b. Power cord or connections	*b.* Repair connections. Repair or replace power cord (fig. 60).
2. Operate and hold the lever switch to the DIAL position. Dial 01 with the remote control dial in the radio receiver. HEAT lamps are not extinguished.	Wiring of four-conductor cord and plug.	Check wiring of four-conductor cord and plug (fig. 60).
3. Fuse alarm buzzer FA sounds	*a.* Short in the circuit indicated by the operated fuse.	*a.* Replace fuse. If the new fuse operates, test the tube associated with the fuse. Replace if necessary. If this does not clear the trouble, remove affected tubes from sockets. (1) If it is a FIL fuse, make resistance checks of affected filament circuit (par. 110). (2) If it is a PLT fuse, check the affected plate and screen circuits (par. 87).

109. Trouble-shooting Chart—Continued

Symptom	Probable trouble	Corrective action
3. Fuse alarm buzzer FA sounds—Continued.	*a.* Short in the circuit indicated by the operated fuse—Continued.	(3) If it is the REC REL fuse, check loop for ground and short circuit. Inspect the receive relay for sufficient clearance between the armature and the contacts; if clearance is not sufficient, adjust the relay (par. 48). (4) If it is the ALM fuse, check the buzzer circuit. Replace operated fuse.
	b. If no fuse is operated, relays P and T contacts sticking or defective.	*b.* Repair or replace defective relay.
4. Rectifier tubes do not glow after 15-second delay when power is supplied.	*a.* Fuses AC1 or AC2	*a.* If the new fuse operates, take d-c resistance readings at tube sockets and reactors L2, L3, L4 (par. 110). Refer to theory of power supplies (pars. 89 through 93).
	b. Transformer T1 windings 10–12 or 6–8 defective.	*b.* Test transformer T1 for open circuit and replace it if necessary.
	c. Tubes V1 and V2	*c.* If either tube is defective, replace both tubes V1 and V2.
	d. Cover switch S1 not operated	*d.* Ascertain that the cover switch is operated by tightening the nuts on the rectifier cover.
	e. Timer TD not operated	*e.* Check operation of timer TD (pars. 92 and 93).
	f. Rectifier cord not plugged into rectifier outlet.	*f.* Check rectifier cord. Make correct connections if necessary.
5. Some tube filaments do not heat.	Filaments open	Test tubes that do not heat and replace defective tubes. Take voltage and resistance readings at the tube sockets of the tubes that do not heat (par. 110).
6. None of the tube filaments heat.	*a.* Transformer T1 defective	*a.* Test transformer T1 and replace it if necessary.
	b. Defective connections or wiring between power supply transformer T1 and fuse panel.	*b.* Make a continuity test to locate trouble. Repair defective connections, and repair or replace defective wiring.
7. Output voltage of power supply cannot be adjusted to 130 volts.	*a.* Either or both tubes V1 and V2 defective.	*a.* Replace both tubes, V1 and V2, if either is defective.
	b. A-c supply voltage to the power supply does not meet requirements.	*b.* Correct a-c line voltage must be obtained.
	c. Power supply voltage regulation circuit.	*c.* Measure voltages in regulating circuit (par. 110). Replace defective part.
	d. Output voltage circuit is not completed through relay R contacts.	*d.* Repair or replace defective relay.
	e. Short or leakage in power supply filter capacitor C1 to C8 in Power Supply PP–737/FGC–1, or C1 to C10 in Power Supply PP–763/FGC–1X.	*e.* Test, and replace the capacitors if necessary.
	f. High output voltage due to grid emission when tubes V1 or V2 become heated or when under heavy load.	*f.* Replace both tubes, V1 and V2, if either grid is emitting.

109. Trouble-shooting Chart—Continued

Symptom	Probable trouble	Corrective action
8. Erratic power supply output voltage.	*a.* Tube V1 or V2 may have high firing point.	*a.* If either tube is defective, replace both tubes V1 and V2.
	b. Trouble in reference voltage circuit.	*b.* Measure voltages in reference voltage circuit (par. 91). Replace defective parts.
	c. Loose connections in rectifier wiring.	*c.* Test and repair connections.
	d. Defective capacitors C1 through C8.	*d.* Test and replace if necessary.
9. Output power of CURR LIM cannot be adjusted to −6 dbm.	*a.* Defective tubes IN, LIM, and AMP.	*a.* Test, and replace tubes if necessary.
	b. CURR LIM circuit elements defective.	*b.* Take voltage and resistance measurements at the tube sockets (par. 110). Replace defective parts.
	c. Broken connections at the terminal board.	*c.* Resolder all broken connections.
10. No d-c current can be measured at the REC REL CURR jacks.	*a.* M CH or S CH filter input shorted.	*a.* Check wiring; repair or replace defective wiring. Test filter (par. 114); replace if necessary.
	b. Defective tubes MVA, MVB, SVA, and SVB.	*b.* Test tubes; replace defective tubes.
	c. Varistors M DET or S DET defective.	*c.* Test varistors (approximately 16 volts d-c between terminal 6 and ground). Replace the varistors if necessary.
	d. +130-volt plate supply voltage to REC REL circuit open.	*d.* Check fuse, and wiring (fig. 60). Replace fuse, repair or replace defective wiring.
11. Low d-c current measured at the REC REL CURR jacks.	*a.* Resistor H open	*a.* Test resistor H; replace it if necessary.
	b. Tubes VA, VB, and VC, in the detector panel, defective.	*b.* Test tubes VA, VB, and VC of both channels; if either channel is under test, replace defective tubes.
	c. ADJ REC GAIN switch open or shorted.	*c.* Test ADJ REC GAIN switch; replace it if necessary.
	d. Defective tubes MVA, MVB, SVA, and SVB.	*d.* Test tubes; replace defective tubes.
	e. ADJ M REC GAIN or ADJ S REC GAIN potentiometers open.	*e.* Check potentiometers; replace them if necessary.
	f. M OUT, S OUT, M IN, or S IN transformers defective.	*f.* Test transformers for short or open. Replace defective transformer.
	g. +130-volt plate supply voltage does not meet requirements.	*g.* Check power supply output voltage; make necessary corrections (par. 37).
12. No current in the LOOP CURRENT jack, when the receive relay is receiving a mark signal.	*a.* REC REL does not meet requirements.	*a.* Test relay (par. 48). Adjust, repair, or replace if necessary.
	b. Open loop, or defective loop equipment.	*b.* Check loop circuit for continuity.
	c. Relay A contacts 1 and 3	*c.* Adjust or replace relay A (par. 111).

109. Trouble-shooting Chart—Continued

Symptom	Probable trouble	Corrective action
13. Symptoms *a*, *b*, and *c* below may appear as a single complex trouble, or they may appear separately. When measuring loop current in a polar loop: *a*. When keyed signals are received meter indicates to the left and erratically. *b*. When a steady mark signal is received, meter indicates zero. *c*. When a steady space signal is received, meter indicates excessive current or +130V TG fuse operates.	*a*. When symptoms appear as a single complex symptom, loop is grounded. *b*. When symptoms *a* or *b* appear without symptom *c*, see item 12 this chart. *c*. When symptom *c* appears alone, resistor J or K is defective.	*a*. Locate and remove the ground. *b*. See item 12 this chart. *c*. Test and replace resistors J or K if necessary.
14. Low current in the LOOP CURRENT jack when the receive relay is receiving a mark or a space signal.	*a*. REC FILTER defective *b*. Capacitor A defective *c*. Loop circuit has high resistance	*a*. Test filter; replace if necessary. *b*. Test capacitor; replace if necessary. *c*. Reduce loop circuit resistance.
15. Continuous mark or continuous space to the loop circuit, with the receive relay receiving both mark and space signals.	Relay A contacts defective or require adjustment.	Clean contacts (par. 111); adjust or replace relay A.
16. Continuous mark to the loop circuit, with the receive relay receiving both mark and space signals.	DIAL—OPER.—SEND switch of the radio receiver in SEND position.	Operate the DIAL—OPER.—SEND switch to the OPER. position. Operate the TST switch to the TST position for approximately 1 second and return it to its normal position.
17. No output from the TEST LEVEL jacks. *Note.*—The output at the LOW TEST LEVEL jack is of too low a level (−50 dbm) to be audible in headphones.	*a*. Tube VA in the frequency indicator panel defective. *b*. Capacitor K, in the frequency indicator panel, open. *c*. Transformer OSC defective.	*a*. Test tube VA; replace it if necessary. Take voltage and resistance test at tube VA socket (par. 110). *b*. Test, and replace the capacitor if necessary. *c*. Test and replace if necessary (par. 114).
18. No indication on METER during any dc test.	*a*. AC—DC METER switch defective. *b*. METER switch in AC position.	*a*. Test, and replace the meter switch if necessary. *b*. Operate METER switch to DC position.
19. No indication on METER during any a-c test.	*a*. Capacitor A in METER circuit open. *b*. Varistor M in METER circuit open.	*a*. Test, and replace if necessary. *b*. Test, and replace if necessary.
20. METER reading is full scale to the left (negative) with the AC—DC METER switch in the DC position.	Tube VC in the frequency indicator circuit defective.	Test tube VC; replace if necessary.
21. METER reading is full scale to the right (positive) with the AC—DC METER switch in the DC position.	Tube VA or VB in the frequency indicator circuit defective.	Test tube VA and VB; replace if necessary.
22. METER reading is full scale to the left (negative) with the AC—DC METER switch in the AC position.	Varistor A shorted	Test, replace varistor A if necessary.

109. Trouble-shooting Chart—Continued

Symptom	Probable trouble	Corrective action
23. FREQ IND bell does not operate when the frequency of the signal from the radio receiver drifts (par. 86).	*a.* Tubes VD, VC, VB, and VA defective.	*a.* Test tubes VD, VC, VB, and VA; replace defective tubes. Take voltage and resistance tests at the tube sockets (par. 110).
	b. Bell defective.	*b.* Test and repair or replace defective bell (par. 86*i*).
24. FREQ IND bell operates	*a.* Radio receiver out of tune	*a.* Retune radio receiver.
	b. Variable resistor OUT improperly set.	*b.* Reset variable resistor OUT (par. 47).
25. Frequency drift in output of radio receiver, indicated by the ringing of FREQ IND bell.	*a.* Polarity reversed in shielded control pair between AFC panel and radio receiver.	*a.* Correct polarity (par. 31).
	b. AFC switch in OFF position.	*b.* Operate AFC switch to ON position.
	c. Tubes V1, V2, V3, V4, and V5, in the automatic frequency control panel, defective.	*c.* Test tubes V1, V2, V3, V4, and V5; replace defective tubes. Take voltage and resistance test at the tube sockets (par. 110).
	d. Capacitors T and U open.	*d.* Test and replace defective capacitors.

110. Voltage and Resistance Measurements

a. Voltage and Resistance Measurements at Tube Sockets. Table I contains typical voltage and resistance readings taken at the pins of each tube in the AN/FGC–1(*). These readings are useful in localizing trouble to the particular element at fault.

(1) A measurement in the AN/FGC–1(*) under test which is widely divergent from the measurement in the table, when used in conjunction with the appropriate schematic diagram (par. 105), will often localize the trouble to a particular circuit element. Small variations in voltage or resistance values from the values given in the table do not necessarily indicate that trouble exists in the circuit associated with the variant measurement. Readings in a particular piece of equipment may vary as much as 20 percent from the readings listed in the table, and still permit the AN/FGC–1(*) to operate properly.

(2) All measurements in table I were made with a 20,000 ohms-per-volt meter, Multimeter TS–352/U. Voltage measurements are dc unless otherwise specified. Resistance and voltage measurements are to ground.

(3) Some resistance measurements are across capacitance. In these measurements, the initial indication on the meter will be higher than the reading when the indicator comes to rest. Wait for the indicator to reach a steady state before making the reading.

Table I. Voltage and Resistance Measurements at Tube Sockets

CURRENT LIMITER

Test point	Resistance (ohms)	Voltage with no signal	Voltage with mark signal	Voltage with space signal
Tube IN Pin No.				
1	0	0	0	0
2	0	0	0	0
3	1200	1. 2	1. 2	1. 2
4	540K	----------	----------	----------
5	1200	1. 2	1. 2	1. 2
6	360K	32	32. 5	32. 5
7	0	6. 20 v ac	6. 30 v ac	6. 3 v ac
8	125K	34	35	35
Tube LIM Pin No.				
1	2. 5 meg	----------	----------	----------
2	220K	110	72	72
3	22K	1. 8	4	4
4	00	0	0	0
5	0	0	0	0
6	0	9	0	0
7	0	0	0	0
8	0	6. 3 v ac	6. 3 v ac	6. 3 v ac

Table I. Voltage and Resistance Measurements at Tube Sockets—Continued

CURRENT LIMITER—Continued

Test point	Resistance (ohms)	Voltage with no signal	Voltage with mark signal	Voltage with space signal
Tube AMP Pin No.				
1	0	0	0	0
2	0	0	0	0
3	33K	65	90	90
4	400K	0	−18	−18
5	900	1. 75	1. 1	1. 1
6	33K	65	90	90
7	0	6. 3 v ac	6. 2 v ac	6. 3 v ac
8	33K	65	90	90

DETECTOR

Test point	Resistance (ohms)	Voltage with no signal	Voltage with mark signal	Voltage with space signal
Tube MVA Pin No.				
1	0	0	0	0
2	0	0	−0	0
3	600	3. 4	3. 4	3. 4
4	[a] 1400	0	0	0
5	750	3. 4	3. 4	3. 4
6	520	125	125	125
7	0	6. 3 v ac	6. 3 v ac	6. 3 v ac
8	2. 1K	125	120	120
Tube SVA Pin No.				
1	0	0	0	0
2	0	0	0	0
3	600	3. 4	3. 3	3. 3
4	[a] 1350	0	0	0
5	700	3. 4	3. 3	3. 3
6	520	125	125	125
7	0	6. 3 v ac	6. 3 v ac	6. 3 v ac
8	2. 1K	125	120	120
Tube MVB Pin No.				
1	00	0	0	0
2	0	0	0	0
3	750	125	121	127
4	6. 8K	90	75	75
5	130K	. 1	17	. 1
6	00	0	0	0
7	0	6. 3 v ac	6. 3 v ac	6. 3 v ac
8	150	14	15	15
Tube SVB Pin No.				
1	00	0	0	0
2	0	0	0	0
3	750	130	127	127
4	6. 8K	90	75	75
5	130K	. 1	. 3	14. 5
6	0	0	0	0
7	0	6. 3 v ac	6. 3 v ac	6. 3 v ac

Footnotes on page 76.

Table I. Voltage and Resistance Measurements at Tube Sockets—Continued

DETECTOR—Continued

Test point	Resistance (ohms)	Voltage with no signal	Voltage with mark signal	Voltage with space signal
Tube VA Pin No.				
1	0	0	0	0
2	0	0	0	0
3	1. 9K	32	32	32
4	750K	25	21	21
5	1. 9K	32	32	32
6	520	125	125	125
7	0	6. 3 v ac	6. 3 v ac	6. 3 v ac
8	6. 8K	85	70	70
Tube VB Pin No.				
1	0	0	0	0
2	0	0	0	0
3	750	11	15. 5	14. 5
4	600K	0	2. 4	2. 4
5	750	115	14	14
6	520	125	125	125
7	0	6. 3 v ac	6. 3 v ac	6. 3 v ac
8	31K	125	105	105
Tube VC Pin No.				
1	0	0	0	0
2	0	0	0	0
3	120	11. 5	14	14
4	600K	. 1	. 7	. 25
5	130	11. 5	14	14
6	520	125	125	125
7	0	6. 3 v ac	6. 3 v ac	6. 3 v ac
8	6. 8K	85	75	75

FREQUENCY INDICATOR UNIT

Test point	Resistance (ohms)	Voltage with no signal	Voltage with mark signal	Voltage with space signal
Tube VB Pin No.				
1	0	0	0	0
2	0	0	0	0
3	1. 9K	4. 6	4. 6	4. 6
4	400	0	0	0
5	1. 5K	4. 6	4. 6	4. 6
6	500	127	127	127
7	0	6. 3 v ac	6. 3 v ac	6. 3 v ac
8	30. 6K	70	70	70
Tube VA Pin No.				
1	200	1. 4	1. 4	1. 4
2	0	0	0	0
3	16K	100	100	100
4	11K	75	75	75
5	19. 2K	−3. 6	−3. 8	−3. 8
6	200	1. 4	1. 4	1. 4
7	0	6. 3 v ac	6. 3 v ac	6. 3 v ac
8	[b] 0–7500	. 1	. 1	. 1

Table I. Voltage and Resistance Measurements at Tube Sockets—Continued

FREQUENCY INDICATOR UNIT—Continued

Test point	Resistance (ohms)	Voltage with no signal	Voltage with mark signal	Voltage with space signal
Tube VD Pin No.				
1	∞	0	0	0
2	0	0	0	0
3	1. 2K	120	120	120
4	500	130	127	127
5	100K	0	0	0
6	0	0	0	0
7	0	6. 3 v ac	6. 3 v ac	6. 3 v ac
8	300	5. 8	5. 8	5. 8
Tube VC Pin No.				
1	0	0	0	0
2	0	0	0	0
3	620	125	125	125
4	80K	0	33	33
5	10K	10	39	39
6	620	125	125	125
7	0	6. 3 v ac	6. 3 v ac	6. 3 v ac
8	620	125	125	125

AUTOMATIC FREQUENCY CONTROL UNIT

Test point	Resistance (ohms)	Voltage with no signal	Voltage with mark signal	Voltage with space signal
Tube V1 Pin No.				
1	0	0	0	0
2	0	0	0	0
3	0	0	0	0
4	2 meg	—. 45	—. 45	—. 45
5	0	0	0	0
6	9. 2K	18	17	18
7	0	6. 3 v ac	6. 3 v ac	6. 3 v ac
8	18K	115	120	115
Tube V2 Pin No.				
1	0	0	0	0
2	0	0	0	0
3	0	0	0	0
4	285K	—. 35	—. 35	—. 35
5	0	0	0	0
6	10. 3K	20	20	20
7	0	6. 3 v ac	6. 3 v ac	6. 3 v ac
8	110K	70	45	70
Tube V3 Pin No.				
1	0	0	0	0
2	0	0	0	0
3	680	3. 6	3. 6	3. 6
4	500K	0	0	0
5	680	3. 6	3. 6	3. 6
6	500	127	127	127
7	0	6. 3 v ac	6. 3 v ac	6. 3 v ac
8	2K	122	122	122

Table I. Voltage and Resistance Measurements at Tube Sockets—Continued

AUTOMATIC FREQUENCY CONTROL UNIT—Con.

Test point	Resistance (ohms)	Voltage with no signal	Voltage with mark signal	Voltage with space signal
Tube V4 Pin No.				
1	0	0	0	0
2	0	0	0	0
3	360K	—1	19 v ac	11 v ac
4	9K	20. 0	20	20
5	360K	—1	19 v ac	11 v ac
6	0	0	0	0
7	0	6. 3 v ac	6. 3 v ac	6. 3 v ac
8	9K	20	20	20
Tube V5 Pin No.				
1	0	0	0	0
2	0	0	0	0
3	250K	—. 25	—. 25	—. 25
4	0	0	0	0
5	250K	—. 15	—. 15	—. 15
6	φ	0	0	0
7	0	6. 3 v ac	6. 3 v ac	6. 3 v ac
8	400K	0	0	0

POWER SUPPLY

Test point	Resistance (ohms)	Voltage with no signal	
Tube V1 Pin No.			
2	500	2.8 v ac	Socket voltages cannot be measured with the tube in the socket because of the inaccessibility of the socket.
4 (TD not operated).	26K		
4 (TD operated)	50K		
7	500		
CAP	16. 5	440 v ac	
Tube V2 Pin No.			
2	500	2.8 v ac	Socket voltages cannot be measured with the tube in the socket because of the inaccessibility of the socket.
4 (TD not operated).	26K		
4 (TD operated)	50K		
7	500		
CAP	16. 5	440 v ac	

[a] The resistance at this point depends on the setting of variable resistor ADJ M REC GAIN (or ADJ S REC GAIN). As the resistor control is rotated from the extreme counterclockwise position, the resistance between pin 4 of tube MVA (or SVA) and ground increases from 0 to approximately 6.2K ohms and then decreases to 5K ohms at the extreme clockwise position.
[b] Measurement is dependent upon position of variable resistor ZERO ADJ.

Table II. D-C Resistance of Transformers

Transformer	Winding	Resistance (ohms)
	Detector Panel	
M IN	1–2	50
	3–4	2, 700
S IN	1–2	50
	3–4	2, 700
M OUT	1–2	683
	3–4	1, 800
S OUT	1–2	683
	3–4	1, 800
	Frequency Indicator Panel	
OSC	1–3	4. 7
OUT	1–4	104
	5–6	695
	Automatic Frequency Control Panel	
OUT	1–2	683
	3–4	1, 800
	Current Limiter Panel	
IN	8–9	7. 8
	1–7	3, 650
OUT	1–2	63
	5–6	
	3–4	3, 100
	7–8	

b. Resistance of Transformer Windings. Table II contains typical resistance readings of transformer windings taken when the transformers are *not* connected in the circuit.

(1) Resistance readings taken across the transformer terminals when the transformers are connected in the circuit usually will be lower than the readings in table II because of resistance paths in parallel with the transformer.

(2) When trouble is suspected in a transformer, open the leads to one terminal of each winding to be tested before measuring the resistance of the winding. Refer to paragraph 107 before disconnecting the leads.

111. Relay Adjustment

The AN/FGC–1(*) contains seven relays: two receive relays, relays A, B, and C, in the monitor circuit, and relays P and T in the fuse circuit.

a. Other than the receive relays, these relays should not be tested or adjusted unless trouble is suspected. When trouble is suspected in one of these relays, it should be tested and adjusted in accordance with the instructions in TM 11–4032 for Western Electric Co. relays. Relays A and C are U-type relays; relay B is a Y-type relay; relays P and T are R-type relays. Use Test Set I–181–( ) to make the tests. Circuit requirements for these relays appear in table III.

b. The receive relays should be tested and adjusted in accordance with the instructions in TM 11–2513. Use Test Set I–193–( ) to make the tests.

Table III. Electrical requirements for relays

Relay	Circuit preparation: Block or insulate	Test clip data: Con Bat	Test clip data: Con Gnd	Test set	Test winding	D-c flow required: Test for	After soak (amp)	Test (amp)	Readj (amp)	See notes
A		T(A)		Bat		O		0. 0165	0. 0155	1, 2.
B	3B(C)		B(B)	Gnd		O	0. 0315	. 021	. 020	1, 3, 4.
	3B(C)		B(B)	Gnd		H	. 0315	. 0021	. 002	1, 3, 4.
	3B(C)		B(B)	Gnd		R	. 0315	. 0011	. 0015	1, 3, 4.
C		T(C)		Bat		O		. 018	. 017	1, 3, 4.
		T(C)		Bat		NO		. 0135	. 0145	1, 2.
P, T		RB		Bat		O		. 007	. 0066	5.

NOTES

1. Operate switch TST.
2. Connect test set to terminal 16 on the receive relay terminal board instead of to battery.
3. Adjacent relays will not be energized.
4. Connect the test set to terminal 22 on the receive relay terminal board instead of to ground.
5. Remove the associated fuse or heat coil.

112. Test Board, Use and Construction

When several AN/FGC–1(*) bays are used at a single location, a test board may be used to make maintenance and operation more convenient. The test board usually is constructed locally to meet the requirements of the particular installation.

a. The main purposes of the test board are to permit patching components of one bay to another bay while clearing trouble, to provide flexibility in assignment of radio receivers to AN/FGC–1(*) bays, and to provide flexibility in assignment of AN/FGC–1(*) bays to loop circuits.

b. The test board consists of a number of jack strips, a mounting for the jack strips, and the wiring associated with the jacks. The following instructions provide for the installation of the most commonly used test board jacks and the installation of two trunks from each AN/FGC–1(*) bay to the test board.

(1) Mount jacks in the two blank spaces provided at the right-hand end of the AN/FGC–1(*) jack strip (fig. 20). Wire these jacks through the bay terminal board to test board jacks.

(2) Terminate all loops and all loop wires from the AN/FGC–1(*) bay in test board jacks.

(3) Provide jacks on the test board which are wired so that a teletypewriter may be connected in series or in parallel with any loop.

Note. For the purposes of the following instructions only, the jack at the extreme right of the AN/FGC–1(*) jack strip is called the right-hand jack, and the jack immediately to the left of the right-hand jack is called the left-hand jack. Neither of these jacks is supplied as part of the AN/FGC–1(*) ((1) above).

c. Any AN/FGC–1(*) bay may be connected to any loop by means of the test board. This is possible because each loop and each AN/FGC–1(*) output pair is connected to a separate test board jack. To accomplish the connection, patch the two appropriate jacks.

d. A radio receiver normally associated with a particular bay may be patched to any other bay by means of the test board. Instructions for connecting the output of the radio receiver normally associated with AN/FGC–1(*) bay No. 1 to the input of bay No. 2 are given in (1) through (3) below as an example of this type of patching.

(1) Patch from the RAD REC OUT jack of bay No. 1 to the right-hand jack.

(2) At the test board, patch the jack connected to the right-hand jack of bay No. 1 to the test board jack which is connected to the right-hand jack of bay No. 2.

(3) Patch the right-hand jack of bay No. 2 to the INP FILT IN jack.

e. It is impractical to remove a panel from an AN/FGC–1(*) bay to test or repair the panel (par. 7*b*). When it is necessary to substitute an equivalent panel for one which is to be tested or repaired, the substitution may be achieved without removing the panel from the bay if a test board is used. The substitution method is outlined below—

(1) Obtain six two-conductor cord-and-plug patch cords.

(2) Use an AN/FGC–1(*), which is not in operation at the time, as the source of the equivalent panel.

(3) Connect one of the cords between the input jack of the equivalent panel and the right-hand jack on the same bay.

(4) Connect another cord between the output jack on the equivalent panel and the left-hand jack on the same bay.

(5) Connect a cord between the output jack of the panel preceding the panel to be tested or repaired and the right-hand jack of the same bay.

(6) Connect a cord between the input jack of the panel following the panel to be tested or repaired and the left-hand jack.

(7) At the test board, connect a cord between the jacks which are connected to the two right-hand jacks (*b* (1) above).

(8) At the test board, connect the sixth cord between the jacks which are connected to the two left-hand jacks.

113. Receive Relay Panel Terminal Board, Solder Connections, Repair

When making repairs on the receive relay panel terminal board which require soldering, it is necessary to remove the terminal board from the panel because of the inaccessibility of the solder lugs. No other terminal board requires removal when solder connections are made.

a. Remove the two screws *on the front of the panel* which hold the terminal board to the panel. *Do not* loosen the screws on the terminal board which are seen from the rear of the equipment.

b. Pull the terminal board away from the panel. Be careful not to break any connections while moving the terminal board. There is sufficient slack in the cables to permit moving the terminal board to a position in which all solder lugs are accessible.

c. After completing the repairs, replace the terminal board on the panel and tighten the two screws which hold it in place.

114. Oscillator Adjustment and Filter Tests

a. Oscillator Adjustment Procedure.

(1) When a fault develops in an AN/FGC–1–(*) and systematic tests indicate that it is necessary to retune the oscillator of the frequency indicator (for instance, because of the replacement of a defective transformer OSC or tuning capacitor), obtain an accurate 2,550-cycle tone from some other station if possible. This must be sent by amplitude modulation or modulated CW (continuous wave) and received with no local BFO. Adjust the capacitance in capacitors C1 to C13 to obtain not over 5 beats per second between the two tones.

(2) If the method given in (1) above is not practical, proceed as follows—

(*a*) Insert open-circuit plugs in the S DET IN jack of channel A, in the M and S DET IN jacks of channel B, and in the DETECTOR OUT CH B M and S jacks.

(*b*) Patch the NORMAL TEST LEVEL jack to PAD IN jack of channel A.

(*c*) Adjust the REC REL 1 current to approximately one-half its maximum value with variable resistor ADJ M REC GAIN.

(*d*) Without changing this gain, patch the M DET IN to the S CH F OUT and repeat the measurement.

(*e*) Adjust the capacitance in capacitors C1 to C13 to make the two currents measured in (*c*) and (*d*) above nearly equal. The smaller of the two currents should exceed one-half of the larger current. If the larger current measured is the maximum relay current for the detector, reduce the detector gain until this current is less than maximum and repeat the measurements with the new gain. When the current through the marking filter is larger than that through the spacing filter, the capacitance is too large.

Note. By this method the frequency is adjusted to approximately 2,520 cycles, the frequency at which the loss characteristics of the filters cross (fig. 29). The cross-over points of these filters may vary in different sets of filters throughout the range 2,500 to 2,540 cycles, but they are usually close to 2,520 cycles. This frequency is satisfactory, although it results in the marking and spacing frequencies being, on the average, 30 cycles lower than normal.

b. Filter Band-Pass Measurements. After the frequency is adjusted, and whenever a filter is suspected of being defective, check the band pass of the filter as follows—

(1) Obtain a steady mark signal from the distant station.

(2) Turn the AFC knob to OFF and press the AFC DISCHG button.

(3) Insert open-circuit plugs in the DETECTOR OUT CH B jacks and in all DET IN jacks except the M DET IN jack of channel A.

(4) Adjust variable resistor ADJ M REC GAIN in channel A to make the REC REL 1 current approximately one-half its maximum value.

(5) Change the BFO frequency of the radio receiver slowly to obtain a frequency indication of +80. Watch the frequency-indicator meter while changing the frequency to make sure that the frequency is not changed too much.

(6) Measure the REC REL 1 current. The current should not be less than one-quarter the value measured in (4) above. Change the BFO frequency slowly in the same direction as in (5) above. The REC REL 1 current should reduce to zero for a moderate change in frequency. This tests the lower cutoff frequency of the M CH filter.

(7) Repeat the procedure of (6) above for the M CH filter of channel B, patching the M DET IN jack of channel A to the M CH F OUT jack of channel B.

(8) Change the BFO to make the frequency indication −80 and measure the current. Watch the frequency-indicator meter while changing frequency. It should

change smoothly from +80 to −80. The current should not be less than one-quarter the value measured in (4) above. Change the BFO frequency slowly in the same direction a moderate amount. The relay current should reduce to zero. Without changing the frequency, repeat this measurement on the channel A M CH filter. This tests the upper cutoff frequencies of the M CH filters.

(9) Obtain a steady spacing signal and adjust the BFO to obtain a frequency indication of −80. Patch the M DET IN of channel A to the S CH F OUT of the two channels in turn and measure REC REL 1 current. It should be at least one-quarter that measured in (4) above. Determine that the relay current reduces to zero for a moderate additional decrease in frequency. This tests the lower cutoff frequencies of the S CH filters.

(10) Change the BFO to obtain a frequency indication of +100; watch the indicator meter while changing frequency. Measure the relay currents with the two spacing filters, thus checking the upper cutoff frequencies of the S CH filters. The currents should be at least one-quarter of that measured in (4) above. Check to see that they become zero for a moderate increase in frequency.

(11) The cutoff frequencies of the filters should be close to the extreme frequencies measured above, as shown in figure 29. In the INPUT filter, the cutoff frequencies are not far from the two frequencies which caused frequency indications of +80 and +100 for the marking and spacing signals, respectively.

(12) The cutoff frequencies of the channel B INPUT filter can be tested by patching the INP FILT IN jack of channel B to the CURR LIM OUT jack of channel A and the M DET IN jack to the INP FILT OUT jack of channel B. Similarly, the INPUT filter of channel A can be tested by means of channel B. Adjust the mark frequency for zero frequency indication, and the detector sensitivity for less than maximum value. The relay current then should be at least one-half of the value measured in (4) above when the marking and spacing frequencies are adjusted for an indication of +100. The relay currents should reduce to zero when the BFO frequency is somewhat lower than it was for zero current with the M CH filters, and somewhat higher than for zero current with the S CH filters.

(13) Readjust the sensitivity of the detector of channel A to normal and remove all patch cords and open-circuit plugs.

(14) If these tests indicate that one filter may be defective, readjust the frequency of the oscillator, using the cross-over frequency of channel B filters, and test the cutoff frequencies of all filters again. If both channel B filters do not pass the above tests, when the oscillator of the frequency indicator has been adjusted by means of channel A filters, it is probable that the cross-over frequency of the channel A filters is wrong. For example, if the measurements indicate too much loss (too little current) for the M CH filter when the frequency indication is −80, and too much loss for the S CH filter when the frequency indication is +100, the cross-over frequency of the channel A filters is probably too high.

c. Comparative Data. The curve marked MEASURE in figure 50 gives a representative plot of the indications of the frequency-indicator as the frequency is varied. The curve marked "CALIBRATE" in figure 50 gives a similar plot when the FREQ IND CAL button is depressed. Figure 51 shows the relay current in the REC REL 1 jack plotted against relative detector input level for four detectors. The relative detector input level is measured in db departure from the value which caused one-half the maximum relay current value.

d. Corrective Measures. If the tests outlined in this paragraph show that a filter has developed trouble (for example, that the M CH filter of channel A does not respond to normal band-pass tests, but that the M CH filter of channel B appears to be satisfactory), replace the defective filter.

Caution: Never attempt to make a continuity test through a filter with the current in the testing device greater than that passed by 6 volts in series with 1,000 ohms and the filter. The passage of direct current greater than this usually changes the filter inductance and destroys the usefulness of the filter.

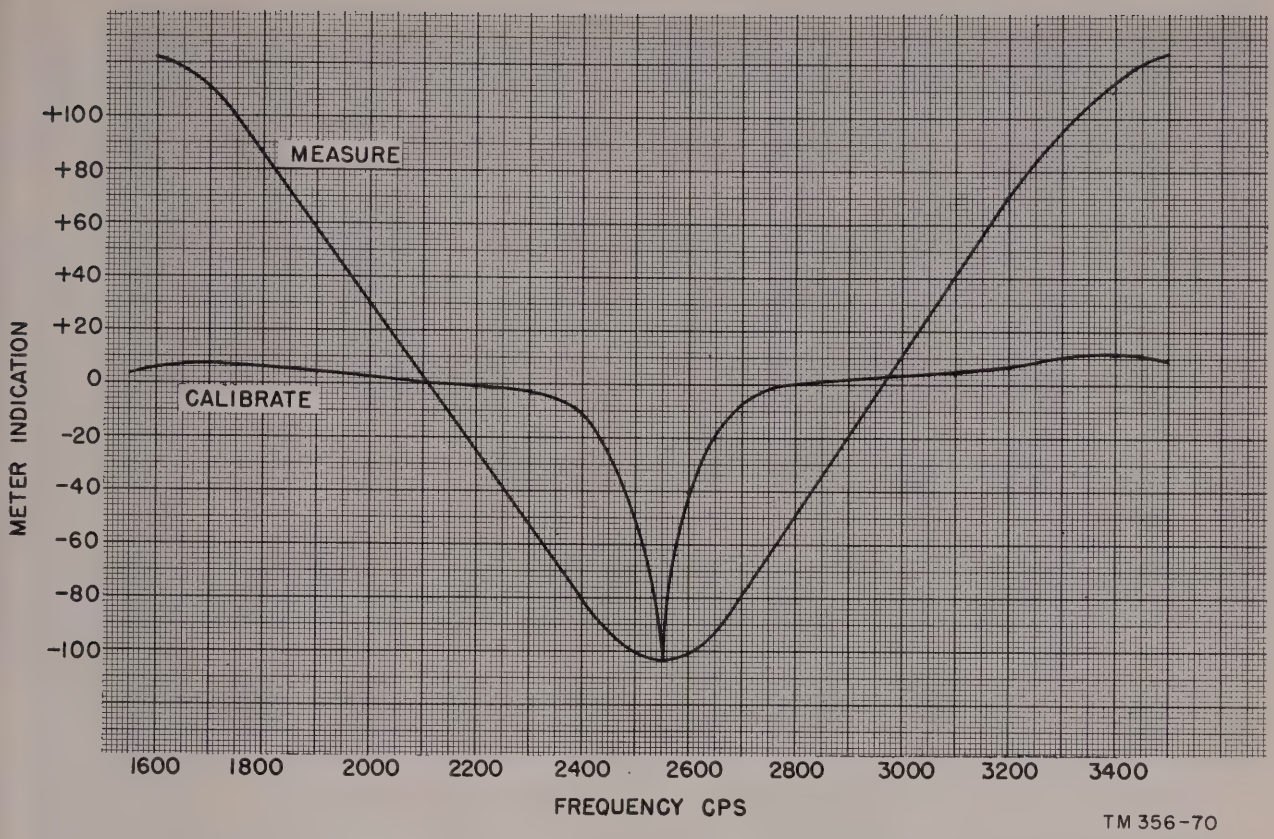

Figure 50. Frequency indicator (Signal Data Converter CV–205/FGC–1) characteristics.

Section III. FINAL TESTING

115. Test Equipment Required for Final Testing

a. General. This section is to be used as a guide in determining the quality of a repaired AN/FGC–1(*). The preoperational tests and adjustments described in paragraphs 41 through 48 are to be used as final tests. Further final tests are outlined in paragraphs 116 through 118. Final tests may be performed by maintenance personnel with adequate test equipment and necessary skills.

b. Test Equipment Required. The following test equipment is required for final testing:

Test equipment	Technical manual	Sig C stock No.
Test Set I–193–( )	11–2513	3F4193A.
Decibel Meter ME–22/PCM		3F3307.11–1.

116. Detector and Noise Suppression Circuit Tests

The procedures outlined below test the maximum output currents of the detector circuits and the operation of the noise suppression circuits. If the meter readings obtained during the tests are lower than the readings indicated in the test procedures, the most probable reason for the low reading is a bad tube in the circuit under test.

a. Detector Maximum Output-Current Test. The purpose of this test is to determine the maximum current the detector panels (Trigger Amplifier AM–591/FGC–1) can supply to the receive relay windings.

(1) Operate the 1 TST switch to the TST position.

(2) Operate variable resistors ADJ M REC GAIN and ADJ S REC GAIN of both

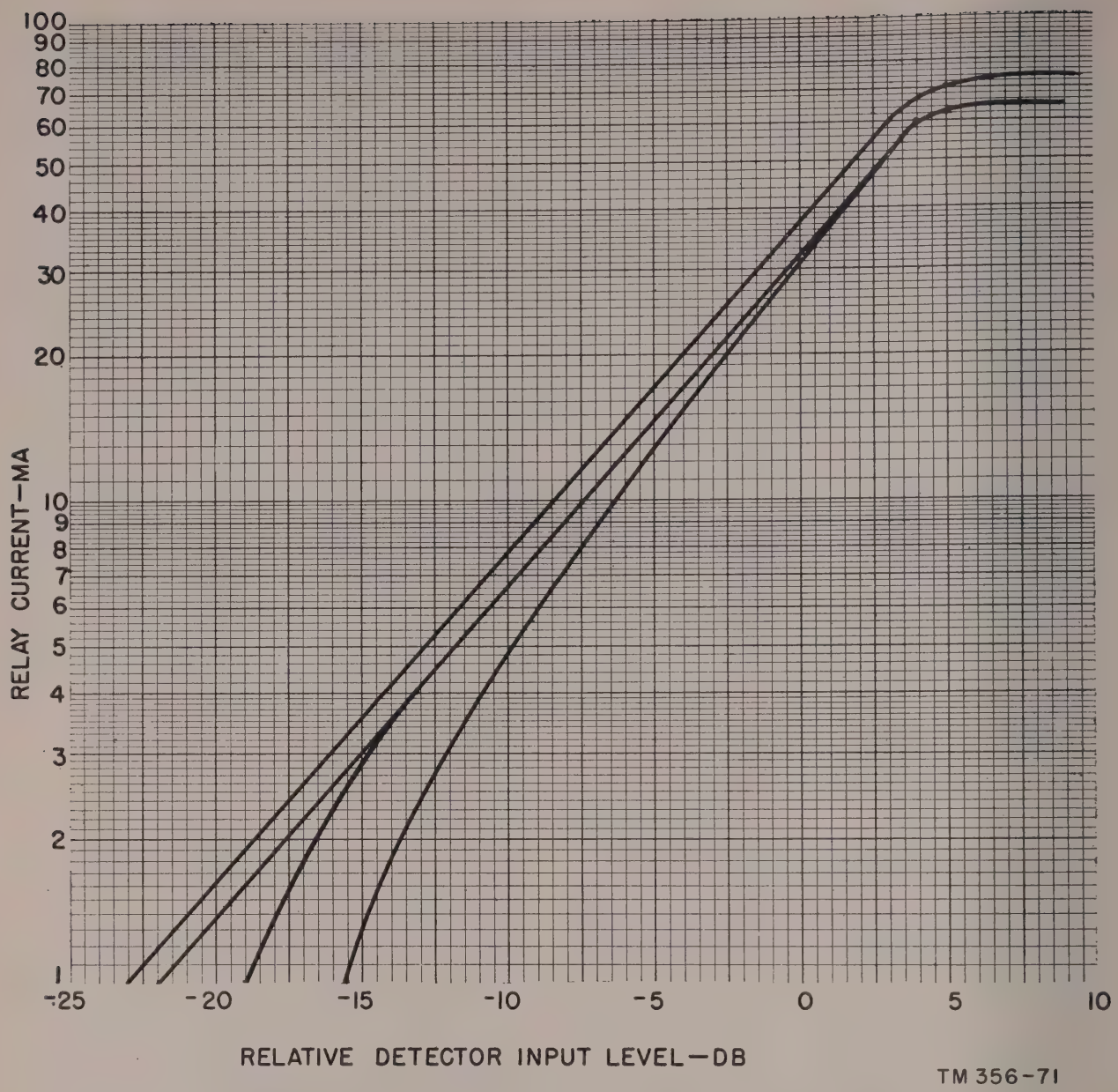

Figure 51. Relay current versus relative detector input level.

channels to the extreme clockwise (maximum gain) positions.

(3) Connect the DETECTORS OUT CH A jacks to the REC REL IN CKT 1 jacks.

(4) Insert open circuit (dummy) plugs in both CURR LIM OUT jacks.

(5) Connect the NORMAL TEST LEVEL jack to the M DET IN jack.

(6) Operate the AC-DC METER switch to the DC position.

(7) Connect the DC METER jack to the REC REL 1 CURRENT jack.

(8) The meter should indicate between +50 and +80 (to the right).

(9) Remove the plug from the M DET IN jack and insert it in the S DET IN jack.

(10) The meter should indicate between −50 and −80 (to the left).

(11) Remove the plug from the DETECTOR OUT CH A jacks and insert it in the DETECTOR OUT CH B jacks.

(12) Remove the plug from the channel A S DET IN jack and insert it in the channel B M DET IN jack.

(13) The meter should indicate between +50 and +80.
(14) Remove the plug from the M DET IN jack and insert it in the S DET IN jack.
(15) The meter should indicate between −50 and −80.
(16) Remove all patch cords.
(17) Connect the SPR A CURRENT jack to the DC METER jack. The meter should indicate between +30 and +50.
(18) Connect the SPR B CURRENT jack to the DC METER jack. The meter should indicate between +30 and +50.

b. Noise Suppression Circuit Test. In this test, a signal is introduced into one channel, and another signal, representing noise, is applied to the other channel. The *noise* is increased gradually in magnitude, and the operation of the noise suppression circuit noted.

(1) Operate channel A variable resistor ADJ S REC GAIN to the extreme counterclockwise position (minimum gain).
(2) Operate channel A variable resistor ADJ M REC GAIN to the extreme clockwise position (maximum gain).
(3) Connect the NORMAL TEST LEVEL jack to the M DET IN jack of channel A.
(4) Connect the LOW TEST LEVEL jack to the CURR LIM IN jack of channel A.
(5) Remove the dummy plug from channel A CURR LIM OUT jack and connect the CURR LIM OUT jack to the S DET IN jack.
(6) Operate the AC-DC METER switch to the DC position.
(7) Connect the DC METER jack to the SPR A CURRENT jack. The meter should indicate between +30 and +55. Record the meter indication.
(8) Remove the plug from the SPR A CURRENT jack and insert it in the SPR B CURRENT jack. The meter should indicate between +30 and +55. Record the meter indication.
(9) Remove the plug from the SPR B CURRENT jack and reinsert it in the SPR A CURRENT jack.
(10) Turn channel A variable resistor ADJ S REC GAIN slowly clockwise until the meter indication is 20 greater than the indication obtained in (7) above.
(11) Remove the plug from the SPR A CURRENT jack and connect it to the SPR B CURRENT jack. The meter indication should be 15 to 30 less than the indication obtained in (8) above.
(12) Remove the open circuit plug from channel B CURR LIM OUT jack and insert the plug in channel A CURR LIM OUT jack.
(13) Operate variable resistor ADJ M REC GAIN of channel B to the extreme clockwise (maximum gain) position.
(14) Operate variable resistor ADJ S REC GAIN of channel B to the extreme counterclockwise (minimum gain) position.
(15) Connect the NORMAL TEST LEVEL jack to the M DET IN jack of channel B.
(16) Connect the LOW TEST LEVEL jack to the CURR LIM IN jack of channel B.
(17) Connect the CURR LIM OUT jack to the S DET IN jack.
(18) Remove the plug from the SPR B CURRENT jack and insert it in the SPR A CURRENT jack. The meter should indicate between +30 and +55. Record the meter indication.
(19) Remove the plug from the SPR A CURRENT jack and insert it in the SPR B CURRENT jack. The meter should indicate between +30 and +55. Record the meter indication.
(20) Turn channel B variable resistor ADJ S REC GAIN slowly clockwise until the meter indication is 20 greater than the indication obtained in (19) above.
(21) Remove the plug from the SPR B CURRENT jack and insert it in the SPR A CURRENT jack. The meter indication should be 15 to 30 less than the indication obtained in (18) above.

117. Automatic Frequency Control Test

The test outlined below determines the effectiveness of the automatic frequency control in correcting the audio-output frequency of the radio receiver when that frequency varies from its assigned value.

a. Place the AN/FGC–1(*) in operation.

b. Request the distant transmitter to transmit a steady mark signal.

c. Adjust the automatic frequency control unit as described in paragraph 46.

d. Operate switch AFC to the OFF position.

e. Depress the DISCHG button momentarily.

f. Adjust the beat-frequency oscillator (BFO) control on the radio receiver to obtain an indication on the frequency meter of +100.

g. Operate switch AFC to the ON position. The indication on the frequency meter should stabilize between 0 and +10 within a few seconds.

h. Operate switch AFC to the OFF position.

i. Depress the DISCHG button momentarily.

j. Adjust the BFO control on the radio receiver to obtain an indication on the frequency meter of −100.

k. Operate switch AFC to the ON position. The indication on the frequency meter should stabilize between 0 and −10 within a few seconds.

l. Readjust the BFO control to obtain correct audio frequencies.

118. Normal Test Level Test

The test outlined below determines the power level of the signal at the NORMAL TEST LEVEL jack. Decibel Meter ME–22/PCM is used to make the test.

a. Obtain a two-conductor patch cord with a two-conductor plug on one end. Prepare the other end of the patch cord to be connected to the binding posts of the decibel meter.

b. Measure the signal level at the NORMAL TEST LEVEL jack. Arrange the decibel meter to terminate a 600-ohm circuit.

c. The decibel meter should indicate a signal level between −3.5 dbm and −8.5 dbm.

CHAPTER 6

SHIPMENT AND LIMITED STORAGE AND DEMOLITION TO PREVENT ENEMY USE

Section I. SHIPMENT AND LIMITED STORAGE

119. Disassembly

To prepare the AN/FGC–1(*) equipment for shipment and limited storage, proceed as follows:

a. Reverse the instructions given in paragraphs 27 through 31 for all external connections to, and all internal connections within, the AN/FGC–1(*) bay.

b. Unbolt the AN/FGC–1(*) cabinet from the associated radio receiver bay. Detach the copper bonding braids between the two cabinets at the top and bottom.

c. Unfasten the AN/FGC–1(*) cabinet from the floor by removing the lag or expansion screws through the holes in the bottom corner brackets of the cabinet.

120. Repacking for Shipment or Limited Storage

The exact procedure in repacking the AN/FGC–1(*) for shipment or limited storage depends on the materials available and the conditions under which the equipment is to be shipped or stored. The following instructions are recommended as a guide in preparing the equipment for shipment or limited storage. Refer to the uncrating, unpacking, and checking instructions in paragraphs 6 and 25, and to figure 4.

a. Remove the wooden mounting base from the packing crate by removing the bolts which fasten it to the bottom of the crate.

b. Install new water-vaporproof barrier material and cushioning shroud inside the packing crate.

c. Block and brace all interior components of the equipment to prevent movement during shipment.

d. Place the equipment, with suitable cushioning under it, in a horizontal position on the mounting base.

e. Secure steel straps under the mounting base and around the mounted equipment; place suitable cushioning pads between the straps and the equipment.

f. Place the mounted equipment in the packing crate; bolt the mounting base to the bottom of the packing crate.

g. Place the salvaged waterproof and water-vaporproof barrier materials (fig. 4) over the mounted equipment in the packing crate to form a protective shroud against possible rain penetration.

h. Place the spare parts and accessories in a fiberboard box. Fasten the fiberboard box and bags of desiccant to the sides of the mounted equipment.

Note. When the equipment is packed for domestic shipment, the desiccant may be omitted.

i. Nail the sides, ends, and top of the packing crate securely in place.

j. Place steel straps around the closed packing crate.

Section II. DEMOLITION TO PREVENT ENEMY USE

121. General

The demolition procedures outlined in paragraph 122 will be used to prevent the enemy from using or salvaging this equipment. Demolition of the equipment will be accomplished *only* upon order of the commander.

122. Methods of Demolition

a. Smash. Smash the controls, tubes, switches, transformers, and relays, using sledges, axes, handaxes, pickaxes, hammers, crowbars, or heavy tools.

b. Cut. Cut cords, wiring, and cabling, using axes, handaxes, or machetes.

c. Burn. Burn cords, resistors, capacitors, and wiring, using gasoline, kerosene, oil, flame throwers, or incendiary grenades.

d. Bend. Bend the panels and cabinets.

e. Explosives. If explosives are necessary, use firearms, grenades, or TNT.

f. Disposal. Bury or scatter the destroyed parts in slit trenches, fox holes, or other holes, or throw them into streams.

g. Destroy everything.

APPENDIX I

REFERENCES

Note. For availability of items listed, check SR 310–20–3, SR 310–20–4, and SR 310–20–5. Check Department of the Army Supply Catalog SIG 1 for Signal Corps Supply Catalog.

1. Army Regulations

AR 380–5	Military Security (Safeguarding Military Information).
AR 750–5	Maintenance of Supplies and Equipment (Maintenance Responsibilities and Shop Operation).

2. Supply Bulletin

SB 11–47	Preparation and Submission of Requisitions for Signal Corps Supplies.

3. Test Equipment

TM 11–2036	Test Sets I–181, I–181–A, and I–181–B.
TM 11–2513	Test Sets I–193–A, I–193–B, and I–193–C.
TM 11–2627	Tube Testers I–177 and I–177–A.
TM 11–5527	Multimeter TS–352/U.
NAV SHIPS 91272	Instruction Book for Oscilloscope OS–8A/U.

4. Painting and Preserving

TB SIG 13	Moistureproofing and Fungiproofing Signal Corps Equipment.
TM 9–2851	Painting Instructions for Field Use.

5. Camouflage, Decontamination, and Demolition

FM 5–20	Camouflage, Basic Principles.
FM 5–25	Explosives and Demolition.
TM 3–220	Decontamination.

6. Other Publications

SR 310–20–3	Index of Training Publications.
SR 310–20–4	Index of Technical Manuals, Technical Regulations, Technical Bulletins, Supply Bulletins, Lubrication Orders, Modification Work Orders, Tables of Organization and Equipment, Reduction Tables, Tables of Allowances, Tables of Organization, and Tables of Equipment.
SR 310–20–5	Index of Administrative Publications.
SR 700–45–5	Unsatisfactory Equipment Report (Reports Control Symbol CSGLD–247).
SR 745–45–5 AFR 71–4	Report of Damaged or Improper Shipment (Reports Control Symbols CSGLD–66 (Army) and AF–MC–U2 (Air Force)).
TB SIG 25	Preventive Maintenance of Power Cords.
TB SIG 66	Winter Maintenance of Signal Equipment.
TB SIG 72	Tropical Maintenance of Ground Signal Equipment.
TB SIG 75	Desert Maintenance of Ground Signal Equipment.
TB SIG 123	Preventive Maintenance Practices for Ground Signal Equipment.
TB SIG 219	Operation of Signal Equipment at Low Temperatures.
TB SIG 223	Field Expedients for Wire and Radio.
TM 11–453	Shop Work.
TM 11–455	Radio Fundamentals.
TM 11–462	Signal Corps Tactical Communication Reference Data.
TM 11–676	Grounding Procedure and Protective Devices.

APPENDIX II
IDENTIFICATION TABLE OF PARTS

Note. This appendix lists the parts for Radioteletype Terminal Equipment AN/FGC–1 and AN/FGC–1C (Sig C Stock No. 4TW61789–2) and AN/FGC–1X (Sig C Stock No. 4TW61789–3). The fact that a part is listed in this table is not sufficient basis for requisitioning the item. Requisitions must cite an authorized basis, such as a specific T/O & E, T/A, SIG 7 & 8, SIG 7–8–10, SIG 10, list of allowances of expendable material, or other authorized supply basis. The Department of the Army Supply Catalog applicable to the equipment covered in this manual is SIG 7 & 8–AN/FGC–1. For an index of available supply catalogs in the Signal portion of the Department of the Army Supply Catalog, see the latest issue of SIG 1, Introduction and Index.

1. Radioteletype Terminal Equipment AN/FGC–1(*)

a. Components.

Ref symbol	Name of part and description	Function of part	Signal Corps stock No.
	CURRENT REGULATOR CN–164/FGC–1: (current limiter panel). (For parts, see par. 2.)	Provides constant input to Trigger Amplifier AM–591/FGC–1.	4TW61789C–1
	DISK TYPE RECTIFIER KS–5844: .24 amp dc; 130 v. (For parts, see par. 3.)	Converts 115 to 230 volts ac into 130 volts dc for loop current.	3H4956–19
	ELECTRICAL EQUIPMENT CABINET CY–1071/FGC–1: (cabinet).	Provides housing for the components of of the AN/FGC–1 (*).	6F290–1071
	FUSE PANEL. (For parts, see par. 5.)	Provides mounting for fuses	4TW61789A–1–F
	JACK PANEL. (For parts, see par. 6.)	Jack assembly—24 jacks for 2 and 3 conductor plugs on the strip.	4TW61789A–1–E
	POWER SUPPLY PP–737/FGC–1: rectifier panel X–61680B); (used only in Radioteletype Terminal Equipments AN/FGC–1 and AN/FGC–1C). (For parts, see par. 7.)	Power supply for the AN/FGC–1 and AN/FGC–1C.	3H4956–10
	POWER SUPPLY PP–763/FGC–1: (rectifier panel X–61680C); (used in Radioteletype Terminal Equipment AN/FGC–1X). (For parts, see par. 8.)	Power supply for the AN/FGC–1X	3H4956–11
	RECEIVER CONTROL C–948/FGC–1: (automatic frequency control unit). (For parts, see par. 9.)	Automatically restores the radio receiver to within specified limits when frequency deviations outside these limits occur.	4TW61789–F1
	SIGNAL DATA CONVERTER CV–205/FGC–1: (frequency indicator panel). (For parts, see par. 10.)	Provides visual indication of the current regulator output.	4TW61789B–1
	SPARE FUSE PANEL. (For parts, see par. 11.)	Provides mounting for spare fuses	4TW61789A–1–G
	TELEGRAPH REPEATER TH–11/FGC–1: (receive relay panel). (For parts, see par. 12.)	Controls loop current	4TW61789E–1
	TERMINAL BOX J–447/FGC–1: (utility outlet and heater panel). For parts, see par. 13.)	A-c supply for the rectifier and appliances	4TW61789A–1–H
	TRIGGER AMPLIFIER AM–591/FGC–1: (detector panel). (For parts, see par. 14.)	Rectifies and amplifies signals from the current limiter (Current Regulator CN–164/FGC–1).	4TW61789D–1
	UNDER VOLTAGE ALARM BZ–27/FGC–1: (alarm and miscellaneous panel). (For parts, see par. 15.)	Provides audible alarm signals (bells and buzzer) when the fuse is operated or the frequency shifts beyond the specified limits.	4TW61789A–1–D

1. Radioteletype Terminal Equipment AN/FGC-1(*)—Continued

b. Maintenance Tools and Materials.

Ref symbol	Name of part and description	Function of part	Signal Corps stock No.
	ADJUSTER, spring: single end 90° bend, w/.015″ wd slot in end.	For adjusting the springs of U- and Y-type relays.	6R41305A
	ADJUSTER, spring: single end 90° bend, w/.015″ wd slot in end.	For adjusting the springs of U-type relays	6R41307A
	BRUSH, painting: oval	Sash tool brush	6Z1567
	CASE	Toolbox	6Q11824
	CLIP, electrical: alligator type	To make electrical contact	6Q28775
	CLIP, electrical: alligator type	Used with cords for general testing	6R41165
	CLIP, electrical: alligator type	To make electrical contact	3Z1087–2
	CLIP, electrical: ferrule type	Armature blocking tool for U- and Y-type relays.	6R41308A
	CLIP, electrical: tweezer type	For use in making test connections to the springs and terminals of relays and other telephone apparatus.	6R41219A
	CORD, switchboard: 1 tinsel cond; rubber ins; black; 3′ lg excluding terminations; WECo #360A tool at ea end.	Test cord for general testing and for interconnection of circuits.	3E1W13A
	CORD, switchboard: 2 tinsel cond; rubber ins; black; 6″ lg excluding terminations; patching cord; WECo #360A tool at ea end.	Test cord for use with tools (WECo types 364, 365, and 419).	3E1W13B
	CORD, telephone receiver: 2 tinsel cond; rubber ins; individual cond; color-coded white-red; 6½′ lg o/a; patching cord; slate color; WECo #310 plug at one end; WECo #360B and WECo #360C tool at other end.	Test cord for use with tools (WECo types 364, 365, and 419).	3E2W17A
	EXTRACTOR, lamp	For removing No. 2 type lamps from sockets.	6R41353A
	GAUGE TL–559U: gm tension gage; 0–150 gm.	For measuring the relay spring tensions	6R40870J
	GAUGE, thickness: flat type; .008″ thk	For checking the mechanical requirements of the relay springs.	6R40932A
	GAUGE, thickness: flat ype; .010″ thk	For checking the mechanical requirements of the relay springs.	6R40932B
	GAUGE, thickness: flat type; .013″ thk	For checking the mechanical requirements of the relay springs.	6R40932C
	GAUGE, thickness: flat type; .015″ thk	For checking the mechanical requirements of the relay springs.	6R40867A
	GAUGE, thickness: flat type; .035″ thk	For checking the mechanical requirements of the relay springs.	6R40932L
	HEADBAND	Used with the telephone receiver (stock No. 2B2116).	2B740
	PROD, test: tweezer type	For continuity testing	6R41219A
	RECEIVER, telephone: resonant, magnetic type; mts in 2B740 headband.	Test receiver for general testing, continuity checking, and monitoring.	2B2116
	RESISTOR, fixed: WW; 5.1 ohms ±5%; ½ w; JAN type RU3B5R1J.		3RU13203
	SCALE, weighing: 0–15 gm in 5 gm steps	Spring tension gage	6R40870J
	SCREWDRIVER: offset, 90° on ea end		6R41007
	SCREWDRIVER: for slot drive; 4½″ lg o/a, ⅛″ wd x 1/32″ thk blade.	Cord repair screw driver	6R40909.1
	SPRING: flat type; approx 5″ lg x ¾″ wd x .065″ thk.		
	SPUDGER: for general use	For removing excess solder and for other general cleaning applications.	6R25351
	STICK, orange	For general cleaning purposes	6Z7360
	SWITCHBOARD TOOL TL–388/U: offset, 30° on ea end; for slot drive; 5″ lg o/a, ¼″ wd x .028″ thk bit ea end.	Screw driver for adjusting relay spring pile-up screws, etc.	6R41006

1. Radioteletype Terminal Equipment AN/FGC–1(*)—Continued

b. Maintenance Tools and Materials.

Ref symbol	Name of part and description	Function of part	Signal Corps stock No.
	TERMINAL, lug: spade type	Used with cords for general testing	6R41164
	TEST SET, telephone	For general testing, continuity checking, testing for battery or ground, and monitoring.	4F4316
	WRENCH: combined socket wrench and screw driver.	For adjusting relay armature contact screws.	6R40872
	TOOTHPICK	For general cleaning	6Z8666
	WRENCH: double end box offset; 3/16''; 1/4'' hex. openings.	For adjusting the armature travel of flat-type relays.	6R41274A
	WRENCH: double end socket and scdr comb.; fits 3/16'' and 5/36'' hex nuts.		

c. Miscellaneous Equipment (Equipment Not Associated With a Particular Component Panel).

Ref symbol	Name of part and description	Function of part	Signal Corps stock No.
	CONNECTOR, plug: straight type		6Z1727.1
	CORD, switchboard: 2 tinsel cond; rubber ins individual cond; color-coded white-red; 2′ 3′′ lg o/a.	Patching cord	3E4035–44
	CORD, switchboard: 2 tinsel cond; rubber ins individual cond; color-coded white-red; 2½′ lg o/a.	Patching cord	3E2P13D
	CORD, switchboard: 2 tinsel cond; rubber ins individual cond; color-coded-red-white; 4′ 3′′ lg o/a.	Patching cord	3E7420–48–6
	CORD, switchboard: 3 tinsel cond; rubber ins; slate color; 2½′ lg o/a.	Patching cord	3E3P7D
	CORD, telephone receiver: 2 tinsel cond; rubber ins; 2½′ lg. o/a.	Cord for the test receiver	3E4035–14
	DUMMY, plug, telephone: takes PJ–047B or similar type plug; black ins.	Used with a jack that accommodates the WECo type 47 plug and similar type plugs.	4C7365C
	DUMMY, plug, telephone: takes PJ–047B or similar type plug; red ins.	Used with a jack that accommodates the WECo type 47 plug and similar type plugs.	4C7365D

2. Current Regulator CN–164/FGC–1 (Current Limiter Panel)

Ref symbol	Name of part and description	Function of part	Signal Corps stock No.
A	CAPACITOR, fixed: paper; 25,000 μμf +2%—4%; 650 vdcw.	Cathode-bias capacitor for tube LIM	3DA25–8
AA, AC, B, C	CAPACITOR, fixed: paper; 3 μf ±15%; 250 vdcw.	AA—Cathode bypass for tube IN AC—Prevents interaction between the plate and the screen grid of tube IN. B—With resistor R, forms a filter for the plate supply of tube LIM. C—With resistor P, forms a filter for the plate supply of tube AMP.	3DB3.13
AB	CAPACITOR, fixed: paper; 100,000 μμf ±15%; 600 vdcw; JAN type CP75A1AF104L.	Screen grid bypass capacitor for tube IN.	3DA100–139

2. Current Regulator CN–164/FGC–1 (Current Limiter Panel)—Continued

Ref symbol	Name of part and description	Function of part	Signal Corps stock No.
AK	CAPACITOR, fixed: mica; 2000 μμf ±5%; 500 vdcw; JAN type CM30-D202J.	Blocking capacitor to keep the plate potential from the grid of tube LIM.	3K3020242
E, G	CAPACITOR, fixed: ceramic; 150 μμf ±2%; 500 vdcw; JAN type CC36-SH151G.	E—With reactor E, forms a filter to remove high frequencies. G—Attenuates high frequencies.	3D9150–65
F	CAPACITOR, fixed; mica; 3900 μμf ±2%; 500 vdcw; JAN type CM35-D392G.	Blocking capacitor to keep the plate potential from the grid of tube AMP.	3K3539243
INPUT	FILTER, band pass: 2,400 cps oper freq, 1700-3400 cps band wd.	Attentuates currents that are outside the range of 1,700 to 3,500 cps.	3Z1892–3.23
IN CURR LIM, IN INP, FILT, INP FILT OUT, RAD REC OUT.	JACK, telephone: twin jack, for 2 cond plug .205″ dia.	IN CURR LIM—For connecting to the input of the current limiter. IN INP FILT—For connecting to the input of the INPUT filter. INP FILT OUT—For connecting to the output of the INPUT filter. RAD REC OUT—For connecting to the output of an associated radio receiver.	4C4904.10A
MON	JACK, telephone: for 2 cond plug .250″ dia.	Provides convenient means for monitoring input to the current limiter.	4C4823A
A	REACTOR: audio type; 113 mh; 440-ohm dc resistance; encl case, cellulose acetate cover.	With capacitor E, forms a filter to remove high frequencies.	3C1988–1
A	RESISTOR, fixed: WW; 480 ohms ±1%; 5 w; 1 tap, 240-ohm resistance between tap and ends.	With resistor B, forms a 7-db pad to provide correct impedance terminations for the INPUT filter.	3Z6024–2
AA, AE	RESISTOR, fixed: comp; 100,000 ohms ±10%; ½ w; JAN type RC20BF104K.	AA—Transformer IN terminating resistance. AE—Plate circuit resistor for tube IN.	3RC20BF104K
AB	RESISTOR, fixed: comp; 1,200 ohms ±5%; ½ w; JAN type RC20BF122J.	Cathode-bias resistor for tube IN.	3RC20BF122J
AC	RESISTOR, fixed: comp; 510,000 ohms ±5%; ½ w; JAN type RC20BF514J.	Grid leak for tube IN	3RC20BF514J
AD	RESISTOR, fixed: comp; 330,000 ohms ±10%; ½ w; JAN type RC20BF334K.	Screen grid resistor for tube IN	3RC20BF334K
AF, R	RESISTOR, fixed: comp; 20,000 ohms ±5%; 1 w; JAN type RC30BF203J.	AF—Voltage-dropping resistor for tube IN. R—Voltage-dropping resistor for tube LIM.	3RC30BF203J
B	RESISTOR, fixed: WW; 670 ohms ±1%; 5 w.	With resistor A, forms a 7-db pad to provide correct impedance termination.	3Z6067
C	RESISTOR, fixed: WW; 550 ohms ±1%; 5 w; 1 tap, 260 ohms; 290-ohm resistance not used.	For balancing the plate impedance of tube AMP for the INPUT filter.	3Z6029–1
D	RESISTOR, fixed: WW; 502 ohms ±5%; 5 w; 1 tap, 232-ohm and 270-ohm resistance between tap and ends.	With variable resistor OUT, provides the correct impedance termination for the 6–5 winding of output transformer OUT.	3Z6027–5

2. Current Regulator CN–164/FGC–1 (Current Limiter Panel)—Continued

Ref symbol	Name of part and description	Function of part	Signal Corps stock No.
E	RESISTOR, fixed: WW; 500 ohms ±5%; 5 w.	Provides correct impedance termination for the detector circuit.	3Z6050–62
F	RESISTOR, fixed: WW; 520 ohms ±5%; 5 w; 1 tap, 260-ohm resistance between tap and ends.	Provides correct impedance termination for the 6–5 winding of output transformer OUT.	3Z6026–1
G	RESISTOR, fixed: WW; 2000 ohms ±5%; 5 w; total resistance.	Protects input to the detector circuit against accidental short circuits.	3Z6200–55
H, L	RESISTOR, fixed: comp; 200,000 ohms ±5%; ½ w; JAN type RC20BF204J.	H—Part of the low-pass filter L—Plate resistor for tube LIM.	3RC20BF204J
J	RESISTOR, fixed: comp; 2 meg ±5%; ½ w; JAN type RC20BF205J.	Grid lead for tube LIM	3RC20BF205J
K	RESISTOR, fixed: comp; 22,000 ohms ±10%; ½ w; JAN type RC20BF-223K.	Cathode-bias resistor for tube LIM	3RC20BF223K
M	RESISTOR, fixed: comp; 390,000 ohms ±5%; ½ w; JAN type RC20BF394J.	Grid lead for tube AMP	3RC20BF394J
N	RESISTOR, fixed: comp; 910 ohms ±5%; ½ w; JAN type RC20BF911J.	Cathode-bias resistor for tube AMP	3RC20BF911J
P	RESISTOR, fixed: comp; 30,000 ohms ±5%; 1 w; JAN type RC30BF303J.	Part of the plate circuit filter for tube AMP.	3RC30BF303J
S	RESISTOR, fixed: comp; 3000 ohms ±5%; ½ w; JAN type RC20BF302J.	Reduces the effect of the monitoring circuit on the input signal level.	3RC20BF302J
OUT	RESISTOR, variable: WW; 350 ohms ±10%; 3 w; JAN type RA25A1FK-351AK.	With varistor D, provides correct impedance termination for the 1–2 winding of output transformer OUT.	3RA4807
	SOCKET, electron tube: octal; 1 piece, under chassis mtg; JAN type TSB8T101.	Socket for tubes AMP, IN, and LIM	2Z8678.326
IN	TRANSFORMER, AF: input type; pri, 300-ohm impedance; secd, 357,000-ohm impedance; encl metal case.	Steps up signal voltage and connects the INPUT filter to the control grid circuit of tube IN.	2Z9631.23
OUT	TRANSFORMER, AF: plate coupling type; pri, 23,000-ohm impedance; secd, 500-ohm impedance ct; encl metal case.	Provides outputs from tube AMP to the detector and the frequency indicator circuits.	2Z9648.2
AMP, IN	TUBE, electron: type 6SJ7	AMP—Limits peaks of polarity opposite those limited by tube LIM to obtain a square and symmetrical output wave. IN—Amplifies low signal currents and limits normal or strong signals.	2J6SJ7
LIM	TUBE, electron: type 6SL7WGT	Limits signals passed by tube IN	2J6SL7WGT

3. Disk Type Rectifier KS–5844

Ref symbol	Name of part and description	Function of part	Signal Corps stock No.
	CAP: (extractor): bakelite cap which holds fuse in mtg.	Part of the fuse mounting which holds the fuse and is used to remove the fuse.	3Z–930
	PLUG CAP: nonpolarized; 2 cond; 10A, 250 v; 15A, 125 v.	Used on a-c line cord	6Z1727–1
	BOARD, terminal: w/4 screw terminals attached.	Input and output lead connection	4Z6720
C1, C2	CAPACITOR: electrolytic; 500μf +100% −10% at 120 cps; 200 vdcw; ambient temperature −40° to +85° C.	Load filter	3DB500–7
F	FUSE: 1 amp, 250 v; w/thermal cutout which operates on low overloads of long duration and fuse link which operates on high overloads of short duration.	Overcurrent protection	3Z2601.16
	FUSEHOLDER	Holds the fuse	3Z3285–2
	KNOB: bar knob w/pointer and white line on pointed; radius ¾″; h ⅞″.	Used with voltage adjusting switches, SW 17 COARSE and SW 17 FINE.	2Z5822–2
	REACTOR, filter: resistance 10.8 ohms at 24° C; inductance 3.5 hy w/.25 amp dc, measured at 60 cps.	Voltage ripple suppression	3C323–3A
R3	RESISTOR, fixed: WW; 4000 ohms ±10%, 316 v max .079 amp max, 25 w.	Voltage stabilizer at light load	3Z6400–31
SW4	SWITCH: SPST; toggle; rated 1 amp 250 v; 3 amp, 125 v; solder lug type 1″ x 17/32″ x ½″ o/a.	A-c line transfer	3Z9849.50
SW17	SWITCH: 6 taps; rotary motion 150°; 15 amp, 150 v.	Voltage adjusting	3Z8300–4
T	TRANSFORMER: continuous input rating 120 w; pri wnd for 115/230 v at 25–60 cps ac; w/115/230 v on pri and rated load on secd; voltage on secd, 223.75 v; secd has 5 coarse steps of 19 v ea and 5 fine steps of 4.8 v ea.	Changes the input voltage to voltage required by the rectifier.	
A1–A4	VARISTOR: full-wave bridge; furnishes .24 amp at 130 v; selenium disk type.	Rectification	3H4956–19

4. Electrical Equipment Cabinet CY–1071/FGC–1 (Cabinet)

Ref symbol	Name of part and description	Function of part	Signal Corps stock No.
	ELECTRICAL EQUIPMENT CABINET CY–1071/FGC–1: (cabinet); sheet steel cabinet w/front and rear door; 7′ h, 1′ 10¼″ wd, 1′5″ d; weight approx 425 lb.	Provides a housing for AN/FGC–1(*) equipment panels and associated wiring.	6F290–1071

5. Fuze Panel

Ref symbol	Name of part and description	Function of part	Signal Corps stock No.
+130V PLT			
AFC, ALM, DET A, DET B, FREQ IND, LIM A, LIM B, REC REL 1, REC REL 2, TST SET.	FUSE, indicator alarm: .18 amp, 90–160 v.	AFC—Protects the automatic-frequency control. ALM—Protects the plate alarm relay. DET A—Protects detector A. DET B—Protects detector B. FREQ IND—Protects the frequency indicator. LIM A—Protects current limiter A. LIM B—Protects current limiter B. REC REL 1—Protects receive relay 1. REC REL 2—Protects receive relay 2. TST SET—Protects power supply to the test set battery jack.	3Z2135R
+130V TLC			
ALM, REC REL	FUSE, indicator alarm: .25 amp, 90–160 v.	ALM—Protects the circuit of relays P and T. REC REL—Protects the receive relay circuit.	3Z2135S.
+6.3V FIL			
AFC V1–3, AFC V4–5, ALM BUZ, ALM REL, DET A M, DET A S, DET A N S, DET B M, DET B S, DET BNS, FREQ IND AB, FREQ IND CD, LIM A, LIM B.	FUSE, indicator alarm: 5 amp, 90–150 v.	AFC V1–3—Protects the filaments of tubes V1, V2, and V3 of panel AFC. AFC V4–5—Protects the filaments of tubes V4 and V5 of AFC. ALM BUZ—Protects the fuse alarm buzzer. ALM REL—Protects the buzzer when energized through relay contacts. DET AM—Protects the mark detector circuit, channel A. DET AS—Protects the space detector circuit, channel A. DET ANS—Protects the noise-suppression circuit, channel A. DET BM—Protects the mark detector circuit, channel B. DET BS—Protects the space detector circuit, channel B. DET BNS—Protects the noise-suppression circuit, channel B. FREQ IND AB—Protects the filament supply to tube VA and VB. FREQ IND CD—Protects the filament supply to tubes VC and VD. LIM A—Protects the current limiter A tube filaments. LIM B—Protects the current limiter B tube filaments.	3Z2135N.
	PANELBOARD, fuse: consists of indicator alarm fuses, resistors, solder lug term.	Panel for mounting fuseholders	4TW61789A–1–F.

6. Jack Panel

Ref symbol	Name of part and description	Function of part	Signal Corps stock No.
PLT V TEST, TLG V TEST.	JACK JJ–022: for 3 cond plug .250″ dia.	PLT V TEST—For measuring the voltage of the +130V plate supply. TLG V TEST—For measuring the voltage of the +130V telegraph supply.	2Z5524
DETECTOR OUT CHS A & B M, DETECTOR OUT CHS A & B S, REC LOOP, REC REL IN CKT 1 M, REC REL IN CKT 1 S, RELAY OUT 1, RELAY OUT 2.	JACK JJ–024: for 2 cond plug .250″ dia.	DETECTOR OUT CHS A & B M—For patching the combined outputs of channels A and B mark directors. DETECTOR OUT CHS A & B S—For patching the combined outputs of channels A and B space detectors. REC LOOP—For patching the receive loop. REC REL IN CKT 1 M—For patching the input of receive relay circuit 1. REC REL IN CKT 1 S—For patching the input of receive relay circuit 1. REL OUT 1—For patching the output of receive relay circuit 1. REL OUT 2—For patching the output of receive relay circuit 2.	
CURRENT REC REL 1, CURRENT REC REL 2, CURRENT SPR A, CURRENT SPR B, CURRENT LOOP.	JACK JJ–042: for 3 cond plug .250″ dia.	CURRENT REC REL 1—For measuring the receive relay current of circuit 1. CURRENT REC REL 2—For measuring the receive relay current of circuit 2. CURRENT SPR A—For measuring the noise-suppression control current of channel A. CURRENT SPR B—For measuring the noise-suppression control current of channel B. CURRENT LOOP—For measuring current in the loop.	2Z5542
DETECTOR OUT CH A M, DETECTOR OUT CH A S, DETECTOR OUT CH B M, DETECTOR OUT CH B S.	JACK JJ–085: for 2 cond plug .250″ dia.	DETECTOR OUT CH A M—For patching the output of the channel A mark detector. DETECTOR OUT CH A S—For patching the output of the channel A space detector. DETECTOR OUT CH B M—For patching the output of the channel B mark detector. DETECTOR OUT CH B S—For patching the output of the channel B space detector.	2Z5598A–85
TST SET BAT	JACK JK–23: for 3 cond plug .2065″ dia.	Provides operating power for a relay test set.	2Z5523.
REC REL IN CKT 2 M, REC REL OUT CKT 2 S.	JACK JK–35: for 2 cond plug .250″ dia.	For patching the input of relay circuit 2. When no plug is in the jacks, they connect the disk-type rectifier to receive relay circuit 1. When plugs are in jacks, they connect the disk-type rectifier to receive relay circuit 2.	2Z5535
	MOUNTING: telephone jack mtg.	Mounting for test jacks	4C5723B

7. Power Supply PP–737/FGC–1 (Rectifier Panel X–61680B) (Used only in Radioteletype Terminal Equipments AN/FGC–1 and AN/FGC–1C)

Ref symbol	Name of part and description	Function of part	Signal Corps stock No.
A	BOARD, terminal: ac input strip; 2 term., solder lug type; 1¾″ lg x 1⅜″ wd x 29/32″ thk o/a.	A-c input termination	2Z9402.20
AC	BOARD, terminal: change from 120–240 v; 3 term., double screw type; 2 1/16″ lg x 1⅛″ wd ½″ h o/a.	Termination for changing from 120 to 240 volts.	2Z9403.6
B	BOARD, terminal: output strip; 8 term., double solder lug type; 1 15/32″ lg x 1 9/32″ wd x 1 9/16″ h o/a.	Output termination	2Z9408.4
A, F	CAPACITOR, fixed: paper; 2 μf ±15%; 250 vdcw; JAN type CP76A1HD205L.	A—Suppresses ripple in the regulating circuit. F—Ripple filter.	3DB2–117
B	CAPACITOR, fixed: paper; 750,000 μμf ±10%; 400 vdcw; JAN type CP78A1AE754K.	Ripple feedback	3DA750–11
C1, C2, C3, C4, C5, C6, C7, C8.	CAPACITOR, fixed: electrolytic; 125 μf; 350 vdcw.	Load filters	3DB125–1
D	CAPACITOR, fixed: paper; 2 sect.; 20,000 μμf ±15% ea sect.; 1500 vdcw ea sect.	R-f filter	3DA20–54
E	CAPACITOR, fixed: paper; 1 μf ±15%; 1000 vdcw JAN type CP80C1BG105L.	R-f filter	3DB1–191
H, H1	CAPACITOR, fixed: paper; 10,000 μμf ±10%; 1500 vdcw.	R-f filters	3DA10–152
	CLAMP, electrical: cord feed-through; for ¼″–½″ dia cord.	Output cord feed-thorugh	6Z4847
	CLIP, electrical: grid plate; ins	Provides means for connection to the plate terminal of tubes V1 and V2.	2Z2708.3
AC1, AC2	FUSE FU–50: 3 amp, 250 v	Input fuses	3Z1950
AC1, AC2	FUSEHOLDER: extractor post type; accom single cartridge type fuse.	Holds a cartridge-type fuse	3Z3285–2
L1	REACTOR: swinging choke type; 48–5.5 hy, 100 ma min; 12.2-ohm dc resistance; shell type, rectangular metal case.	Ripple suppression	3C1987–23
L2	REACTOR: filter choke; .07 hy, 600 ma; 1.82-ohm dc resistance; shell type, rectangular metal case.	Ripple suppression	3C1987–24
L3, L4	REACTOR: swinging choke; 3.6 mh; 2.7-ohm dc resistance; HS metal case.	R-f noise suppression	3C1987–05
A, B	RECTIFIER, metallic: copper oxide; input 90 v ac, 60 cyc, single ph; output 60 v dc, 50 ma, half-wave.	In the reference voltage circuit	3H4702–7
H	RECTIFIER, metallic: copper oxide; input 15 v ac, single ph; output .075 amp, full-wave.	Compensates for line voltage changes.	3H4956–5
R	RELAY, armature: SPDT; single wdg, 6.3 v dc, 500 ma, 5.15-ohm dc resistance.	Opens the +130-volt telegraph output circuit when the rectifier is not operating.	2Z7693–9
K1, K2	RELAY ASSEMBLY: 115 v, ac; 50–60 cps; consists of 2 relays (slave relay K1 and thermal relay K2); provides time delay of 20 sec between application of fil voltage and plate voltage; US Army Spec #71–1554; (used only in AN/FGC–1).	Provide a time delay of 20 seconds tetween application of filament voltage and plate voltage.	2Z7598A–10
K2	RELAY, thermal: 115 v, ac; 50–60 cps; SPST; HS; metal, glass envelope; normally open; oper time 20 sec ±3 sec; (used only in AN/FGC–1).	Time-delay relay of relay assembly.	2Z7598–170

7. Power Supply PP–737/FGC–1 (Rectifier Panel X–61680B) (Used Only in Radioteletype Terminal Equipments AN/FGC–1 and AN/FGC–1C)—Continued

Ref symbol	Name of part and description	Function of part	Signal Corps stock No.
A	RESISTOR, fixed: comp; 3600 ohms ±5%; 1 w; JAN type RC30BF362J.	Part of the voltage-control potentiometer.	3RC30BF362J
B	RESISTOR, fixed: comp; 9100 ohms ±5%; 2 w; JAN type RC42BE912J.	Part of the voltage-control potentiometer.	3RC42BE912J
C	RESISTOR, fixed: WW; 700 ohms ±2%; 4 w; 3 taps, 520 ohms, 60 ohms, 60 ohms, 60-ohm resistance between taps.	In the reference voltage circuit	3Z6070–23
D, J	RESISTOR, fixed: WW; 4750 ohms ±1%; 5 w.	In the reference voltage circuit	3Z6475
E, F	RESISTOR, fixed: comp; 22,000 ohms ±5%; ½ w; JAN type RC20BF223J.	Grid current limiter	3RC20BF223J
G	RESISTOR, fixed: comp; 22,000 ohms ±10%; 1 w; JAN type RC30BF223K.	Filter of the reference voltage circuit.	3RC30BF223K
T	RESISTOR, thermal: 1200 ohms; 30 v dc, 25 ma; dc; 2 mtg ears for #6 screws on 1" mtg/c.	In the reference voltage circuit	3Z6926
R	RESISTOR, variable: WW; 2200 ohms ±10%; 2 w.	Adjustable part of the control potentiometer.	2Z7288–6
	RETAINER, electron tube	For clamping tubes V1 and V2 in the sockets.	2Z2642.2
	SOCKET, electron tube: 8 cont med; above or below chassis mtg.	Socket for tubes V1 and V2	2Z8678.1
SW1	SWITCH, sensitive: SPST; plunger type	Cover switch	3Z9558
TD	TIMER, adjustable reset: fixed time indicator; motor oper; spring reset; 110 v, 60 cyc; time adjustable; set for 15 sec operate, 2 sec restore; (used only in AN/FGC–1C).	Provides delay for filament heating.	4DW8708
TD	TIMER, electronic: Consists of relays K1 and K2.	Provides delay for filament heating.	2Z7598A–10
T1	TRANSFORMER, power: fil and plate type; input 120–240 v ac, 50–60 cps, single ph; secd #1, 470 v at 450 ma ct; secd #2, 5 v at 6 amp ct; secd #3, 15 v at 20 ma; secd #4, 347 v at 30 ma; secd #5, 3 taps 10.2 v at 5 amp, 6.6 v at 10 amp, 6.4 v at 10 amp; encl metal case.	Changes line voltage to the voltage required by the rectifier tubes and the tube filaments.	2Z9623.1
V1, V2	TUBE, electron: type 394A	Rectification	2J394A

8. Power Supply PP–763/FGC–1X (Rectifier Panel X–61680C) (Used Only in Radioteletype Terminal Equipment AN/FGC–1X)

Ref symbol	Name of part and description	Function of part	Signal Corps stock No.
A	BOARD, terminal: ac input strip; 2 term., solder lug type; 1¾" lg x 1⅜" wd x 29/32" thk o/a.	A-c input termination	2Z9403.20
AC	BOARD, terminal: change from 120–240 v; 3 term., double screw type; 2 1/16" lg x 1⅛" wd x ½" h o/a.	Termination for changing from 120 to 240 volts.	2Z9403.6
B	BOARD, terminal: output strip; 8 term., double solder lug type; 1 15/32" lg x 1 9/32" wd x 1 9/16" h o/a.	Output termination	2Z9408–4
A, F	CAPACITOR, fixed: paper; 4μf ±15%; 400 vdcw.	A—Suppresses ripple in the regulating circuit. F—Ripple filter.	3DB4–52
B	CAPACITOR, fixed: paper; 750,000 μμf ±10%; 400 vdcw; JAN type CP78A1AE754K.	Ripple feedback	3DA750 11

8. Power Supply PP–763/FGC–1X (Rectifier Panel X–61680C) (Used Only in Radioteletype Terminal Equipment AN/FGC–1X)—Continued

Ref symbol	Name of part and description	Function of part	Signal Corps stock No.
C1, C2, C3, C4, C5, C6, C7, C8, C9, C10.	CAPACITOR, fixed: electrolytic; 200 μf; 200 vdcw.	Load filter	3DB200–1
D	CAPACITOR, fixed: paper; 2 sect.; 20,000 μμf ±15% ea sect.; 1500 vdcw ea sect.	R-f filter	3DA20–54
E	CAPACITOR, fixed: paper; 2μf ±15%; 600 vdcw; JAN type CP80C1BF205L.	R-f filter	3DB2–82
H, H1	CAPACITOR, fixed: paper; 10,000 μμf ±10%; 1500 vdcw.	R-f filter	3DA10–152
	CLAMP, electrical: cord feed-through; for ¼″–½″ dia cord.	Output cord feed-through	6Z4847
	CLIP, electrical: grid plate; ins	Provides means for connection to the plate terminal of tubes V1 and V2.	2Z2708.3
AC1, AC2	FUSE FU–50: 3 amp, 250 v	Input fuses	3Z1950
AC1, AC2	FUSEHOLDER; extractor post type; accom single cartridge type fuse.	Holds a cartridge-type fuse	3Z3285–2
L1	REACTOR: swinging choke type; .48–5.5 hy; 100 ma min; 600 ma max; 12.2-ohm dc resistance; rectangular metal case.	Ripple suppression	3C1987–23
L2	REACTOR: filter choke; .07 hy, 600 ma; 1.82-ohm dc resistance; rectangular metal case.	Ripple suppression	3C1987–24
L3, L4	REACTOR: swinging choke; 3.6 mh; 2.7-ohm dc resistance; HS metal case.	R-f noise suppression	3C1987–05
A, B	RECTIFIER, metallic: copper oxide; input 90 v ac, 60 cyc, single ph; output 60 v dc, 50 ma, half-wave.	In the reference voltage circuit	3H4702–7
C	RECTIFIER, metallic: selenium; input 18 v ac, max 60 cps; output 12.4 v dc, .45 amp, full-wave.	Operates relay R	3H4956–4
H	RECTIFIER, metallic: copper oxide; input 15 v ac, single ph; output .075 amp, full-wave.	Compensates for line voltage changes.	3H4956–5
R	RELAY, armature: SPDT; single wdg, 5.6 v dc, .22 amp, 31-ohm dc resistance.	Opens the +130-volt telegraph output circuit when the rectifier is not operating.	2Z7693–10
A	RESISTOR, fixed: comp; 3,600 ohms ±5%; 1 w; JAN type RC30BF362J.	Part of the voltage-control potentiometer.	3RC30BF362J
B	RESISTOR, fixed: comp; 9,100 ohms ±5%; 2 w; JAN type RC42BE912J.	Part of the voltage control potentiometer.	3RC42BE912J
C	RESISTOR, fixed: WW; 700 ohms ±2%; 4 w; 3 taps, one 520-ohm section and three 60-ohm sections.	In the reference voltage circuit	3Z6070–23
D, J	RESISTOR, fixed: WW; 4,750 ohms ±1%; 5 w.	In the reference voltage circuit	3Z6475
E, F	RESISTOR, fixed: comp; 22,000 ohms +5%; ½ w; JAN type RC20BF223J.	Grid current limiter	3RC20BF223J
G	RESISTOR, fixed: comp; 22,000 ohms +10%; 1 w; JAN type RC30BF223K.	Filter of the reference voltage circuit.	3RC30BF223K
H, K	RESISTOR, fixed: WW; 165 ohms ±5%; 40 w	In the timer supply	3Z6016E–1
T	RESISTOR, thermal: 1,200 ohms; 300 v dc, 25 ma; dc; 2 mtg ears for #6 screws on 1″ mtg/c.	In the reference voltage circuit	3Z6926
R	RESISTOR, variable: WW; 2,200 ohms ±10%; 2 w.	Adjustable part of the voltage control potentiometer.	2Z7288–6
	RETAINER, electron tube	For clamping tubes V1 and V2 in the sockets.	2Z642.2
	SOCKET, electron tube: 8 cont med; above or below chassis mtg.	Socket for tubes V1 and V2	2Z8678.1

8. Power Supply PP–763/FGC–1X (Rectifier Panel X–61680C) (Used Only in Radioteletype Terminal Equipment AN/FGC–1X)—Continued

Ref symbol	Name of part and description	Function of part	Signal Corps stock No.
SW1	SWITCH, sensitive: SPST; plunger type	Cover switch	3Z9558
TD	TIMER, electric: motor oper; spring reset; 17–24 v or 105–126 v, 25–60 cps when in series with 330 ohms; SPDT, set for 15–18 sec operate at 60 cps or 36 sec operate at 25 cps; 2 sec restore.	Provides delay for filament heating.	4DC4436
T1	TRANSFORMER, power: fil and plate type; input 120–240 v 25–60 cps; secd #1, 2.5 v at 3 amp; secd #2, 347 v at 30 ma; secd #3, 15 v at 20 ma; secd #4, 10.2 v at 5 amp: secd #5, 6.6 v at 10 amp; secd #6, 6.4 v at 10 amp; secd #7, 420 to 470 v at 450 ma; metal case.	Changes line voltage to the voltage required by the rectifier and the tube filaments.	2Z9623.3
V1, V2	TUBE, electron: type 394A	Rectification	2J394A

9. Receiver Control C–948/FGC–1 (Automobile Frequency Control Unit)

Ref symbol	Name of part and description	Function of part	Signal Corps stock No.
	BOARD, terminal: for connections between int and ext wiring of unit; 8 double end term.; $1\frac{15}{32}''$ lg x $1\frac{9}{32}''$ wd x $1\frac{1}{16}''$ h o/a.	For connections between the internal and the external wiring of the unit.	2Z9408.4
	BOARD, terminal: for mtg resistors; 18 solder lug term.; $4\frac{3}{4}''$ lg x $3\frac{7}{16}''$ wd x $\frac{1}{16}''$ thk o/a.	For mounting resistors	2Z9418
A, F, L	CAPACITOR, fixed: paper; 1 μf $\pm 15\%$; 250 vdcw; JAN type CP77A1HD105L.	A—Blocking capacitor for the control grid of tube V1. F—Screen grid bypass capacitor for tube V2. L—With resistors U and V, forms a timing circuit in the avc.	3DB1–101
B, C, E, G	CAPACITOR, fixed: paper; 3 μf $\pm 15\%$; 250 vdcw.	B—With capacitor C, reduces the ripple of the avc potential applied to vacuum tube V1 and, with resistance W, delays the action of the avc. C—With capacitor B, reduces the ripple of the avc potential applied to tube V1. Blocking capacitor in the control grid circuit of tube V1. E—Reduces the ripple of the avc potential appled to tube V2 and, with resistor T, delays action of the avc. Blocking capacitor in the control grid circuit of tube V2. G—Bypass capacitor to prevent interaction between plate circuits of tubes V1 and V2.	3DB3.13
D1, D2	CAPACITOR, fixed: paper; 2 sect.; 610,000 $\mu\mu$f min to 860,000 $\mu\mu$f max 1 sect.; 100,000 $\mu\mu$f min to 130,000 $\mu\mu$f max other sect.; 250 vdcw.	D1—Blocking capacitor in the control grid circuit of tube V1. D–2—Blocking capacitor in the control grid circuit of tube V2.	3DA750–1
H	CAPACITOR, fixed: paper; 44,500 $\mu\mu$f $\pm 3\%$; 600 vdcw.	Blocking capacitor between the plate circuit of tube V2 and the grid circuit of V3.	3DA44.500

9. Receiver Control C–948/FGC–1 (Automatic Frequency Control Unit)—Continued

Ref symbol	Name of part and description	Function of part	Signal Corps stock No.
J	CAPACITOR, fixed: paper; 2 μf ±15%; 250 vdcw; JAN type CP76A1HD205L.	Cathode bypass capacitor for tube V3	3DB2–117
K	CAPACITOR, fixed: paper; 100,000 μμf±5%; 600 vdcw; JAN type CP75A1AF101L.	Blocking capacitor in the avc circuit	3DA100–139
M, P	CAPACITOR, fixed: mica; 1,700 μμf±1%; 500 vdcw.	M—Part of the high-pass branch of the discriminator. P—Part of the high-pass branch of the discriminator.	3DA1.700
N	CAPACITOR, fixed: mica; 6500 μμf±1%; 200 vdcw.	Part of the low-pass branch of the discriminator.	3DA6.500
Q, R, T, U	CAPACITOR, fixed: paper; 16μf ±15%; 100 vdcw; JAN type CP32C1BE166L.	Q—With resistor AF, slows the response of the control voltage to changes in current through the high-pass branch of the discriminator. R—With resistor AG, slows the response of the control voltage to changes in current through the low-pass branch of the discriminator. T and U—Slows the response of the control voltage to frequency changes. Reduces the effect of any interference in the frequency-control lead to the associated radio receiver.	3DB16–49
S	CAPACITOR, fixed: paper; 7μf ±15%; 100 vdcw; JAN type CP31C1BE705L.	With resistor AH, prevents hunting of the AFC circuit.	3DB7–9
IN	FILTER, band pass; 2125 cps, 1770–2180 cps bandwidth.	Prevents interference outside the band 1,700 to 2,500 cps from affecting the operation of the frequency control.	3Z1892–3.21
A, B	REACTOR: filter choke; 2.121 hy, 1 ma; 109-ohm dc resistance; HS metal case.	Part of the low-pass branch of the discriminator.	3C1987–03
C	REACTOR: filter choke; 1 hy; 121-ohm dc resistance; HS metal case.	Part of the high-pass branch of the discriminator.	3C1987–30.1
A, AJ, H, J, Z	RESISTOR, fixed: comp; 10,000 ohms ±5%; ½ w; JAN type RC20BF103J.	A—Limits the shunting effect of the frequency-control circuit on the channel A receiver output. AJ—Limits the shunting effect of the frequency-control circuit on the channel B receiver output. H—Grid leak for tube V2. J—With resistor K, reduces the voltage on the screen grid of tube V1. Z—Cathode-bias resistor of tube V4.	3RC20BF103J
AA, G, K, N	RESISTOR, fixed: comp; 47,000 ohms ±5%; ½ w; JAN type RC20BF473J.	AA—Limits positive cathode bias of tube V4. G—Reduces output of tube V1. K—With resistor J, reduces voltage on the screen grid of tube V1. N—With resistor M, reduces voltage on the screen grid of tube V2.	3RC20BF473J
AB, AD, AE	RESISTOR, fixed: comp; 22,000 ohms ±5%; ½ w; JAN type RC20BF223J.	AB—Provides correct input impedance for the low-pass branch of the discriminator. AD, AE—Provides correct output impedance for the low-pass branch of the discriminator.	3RC20BF223J

9. Receiver Control C–948/FGC–1 (Automatic Frequency Control Unit)—Continued

Ref symbol	Name of part and description	Function of part	Signal Corps stock No.
AC, M	RESISTOR, fixed: comp; 12,000 ohms ±5%; ½ w; JAN type RC20BF123J.	AC—Provides correct input impedance for the high-pass branch of the discriminator. M—With resistor N, reduces voltage on the screen grid of tube V2.	3RC20BF123J
AF, AG	RESISTOR, fixed: comp; 220,000 ohms ±10%; ½ w; JAN type RC20BF224K.	AF—With capacitor Q, slows the response of the control voltage to changes in current through the high-pass branch of of the discriminator. AG—With capacitor R, slows the response of the control voltage to changes in current through the low-pass branch of the discriminator.	3RC20BF224K
AH, Q	RESISTOR, fixed: comp; 470,000 ohms ±10%; ½ w; JAN type RC20BF474K.	AH—With capacitor S, prevents hunting of the AFC circuit. Q—Grid leak for electron tube V3.	3RC20BF474K
B, D	RESISTOR, fixed: comp; 1,000 ohms ±5%; ½ w; JAN type RC20BF-102J.	B—Forms correct input impedance for the IN filter. D—With resistor C, forms a potentiometer to reduce the input voltage of tube V1.	3RC20BF102J
C	RESISTOR, fixed: comp; 4,700 ohms ±5%; ½ w; JAN type RC20BF-472J.	With resistor D, forms a potentiometer to reduce the input voltage of tube V1.	3RC20BF472J
E, R	RESISTOR, fixed: comp; 680 ohms ±5%; ½ w; JAN type RC20BF681J.	E—Supplies correct output impedance for the IN filter. R—Cathode-bias resistor for tube V3.	3RC20BF681J
F	RESISTOR, fixed: comp; 2200 ohms ±5%; ½ w; JAN type RC20BF222J.	Decreases the loss in the output circuit of tube V1 through the shunt path to ground.	3RC20BF222J
L	RESISTOR, fixed: comp; 15,000 ohms ±5%; ½ w; JAN type RC20BF153J.	Plate circuit resistor of tube V1	3RC20BF153J
P, U, V	RESISTOR, fixed: comp; 100,000 ohms ±10%; ½ w; JAN type RC20BF104K.	P—Plate circuit resistor for tube V2 U, V—With resistor V, forms a potentiometer to reduce the avc voltage applied to tube V2.	3RC20BF104K
S	RESISTOR, fixed: WW; 3000 ohms ±5%; 5 w.	Reduces the interaction between tubes V1, V2, and V3.	3Z6300–199
T	RESISTOR, fixed: comp; 180,000 ohms ±10%; ½ w; JAN type RC20BF184K.	With capacitor E, delays action of the avc.	3RC20BF184K
W	RESISTOR, fixed: comp; 1.5 meg ±10%; ½ w; JAN type RC20BF155K.	With capacitors B and C, reduces the ripple of the avc potential applied to tube V1.	3RC20BF155K
X, Y	RESISTOR, fixed: comp; 150,000 ohms ±10%; ½ w; JAN type RC20BF154K.	X—With resistor Y, forms a potentiometer to reduce the signal voltage on the plates of tube V4. Y—With resistor X, forms a potentiometer to reduce the signal voltage on the plates of tube V4.	3RC20BF154K
A	RESISTOR, variable: WW; 20,000 ohms ±10%; 3 w.	Adjusts the loss of the low-pass branch of the discriminator to be the same as the high-pass loss at 2,125 cps.	2Z7270.136
	SOCKET, electron tube: octal; 1 piece, under chassis mtg; JAN type TSB8T101.	Socket for electron tubes	2Z8678.326.

9. Receiver Control C–948/FGC–1 (Automatic Frequency Control Unit)—Continued

Ref symbol	Name of part and description	Function of part	Signal Corps stock No.
DISCHG	SWITCH, push: cont arrangement 1A.	Discharges capacitors T and U	4C5105.47A
OFF-ON	SWITCH, rotary: 2 sect.; cont arrangement 2C.	In off position, disables the frequency-control circuit.	4C5105.52A.1
OUT	TRANSFORMER, AF: plate coupling type; pri, 150,000-ohm impedance; secd, 50,000-ohm impedance; metal case, silicon steel core.	Connects the discriminator to the output of tube V3.	2Z9648.3
V1, V2, V3	TUBE, electron: type 6SJ7	V1—Bypasses the IN filter when the signal frequency is outside 1,700–2,500 cps. V2—Variable gain amplifier. V3—Amplifier.	2J6SJ7
V4, V5	TUBE, electron: type 6H6	V4—Rectifier tube in the avc circuit V5—Rectifies the output of the discriminator.	2J6H6

10. Signal Data Converter CV–205/FGC–1 (Frequency Indicator Panel)

Ref symbol	Name of part and description	Function of part	Signal Corps stock No.
METER	AMMETER: dc; 100–0–100 cw; JAN type MR34W101SPEC.	Used to measure audio current levels or d-c.	3F871–29
ALM	BELL: vibrating type; d″ dia gong; 25–30 v 60 cyc; 14–40 v dc, .160 amp.	Rings if the difference between the mark and the space frequencies is excessive, or if receiver tuning is incorrect.	4Z1107A
A, E, K, M	CAPACITOR, fixed: paper; 1 μf ±15%; 250 vdcw; JAN type CP77A1HD105L.	A—Blocking capacitor for a-c meter circuit. E—Blocking capacitor between the output of tube VA and the grid circuit of tube V3. K—Blocking capacitor in the TEST LEVEL circuit. M—Blocking capacitor between tubes VC and VD.	3DB1–104
B	CAPACITOR, fixed: paper; 100,000 μμf ±5%; 600 vdcw; JAN type CP75A1AF101L.	Limits the amplitude of oscillation for tube VA.	3DA100–139
C	CAPACITOR, fixed: mica; 100,000 μμf ±½%; 250 vdcw.	Tuning capacitor in the oscillator circuit.	3DA99.400
C1, C2, C3, C4, Q.	CAPACITOR, fixed: mica; 20,000 μμf ±5%; 600 vdcw; JAN type CM50B203J.	C1, C2, C3, C4—Tuning capacitors for the oscillator. The required number is selected to tune the oscillator to the proper frequency. Q—Filter capacitor in the output circuit of tube VA.	3K5020322
C5	CAPACITOR, fixed: mica; 10,000 μμf ±5%; 300 vdcw; JAN type CM35D103J.	Oscillator tuning capacitor	3K3510342
C6, S	CAPACITOR, fixed: mica; 3,900 μμf ±2%; 500 vdcw; JAN type CM-35D392G.	C6—Oscillator tuning capacitor S—Filter capacitor in the output circuit of tube VA.	3K3539243

10. Signal Data Converter CV–205/FGC–1 (Frequency Indicator Panel)—Continued

Ref symbol	Name of part and description	Function of part	Signal Corps stock No.
C7, T	CAPACITOR, fixed: mica; 3,000 μμf ±2%; 500 vdcw; JAN type CM30C302G.	C7—Oscillator tuning capacitor T—Makes voltage across reactor D proportional to the frequency.	3K3030233
C8, U, V, W	CAPACITOR, fixed: mica; 2,000 μμf ±5%; 500 vdcw; JAN type CM30D202J.	C8—Oscillator tuning capacitor U—Filter capacitor in the input circuit of the frequency indicator. V, W—Filter capacitors in the input circuit of the frequency indicator.	3K3020242
C9	CAPACITOR, fixed: mica; 1,000 μμf ±5%; 500 vdcw; JAN type CM30D102J.	Oscillator tuning capacitor	3K3010242
C10	CAPACITOR, fixed: mica; 390 μμf ±2%; 500 vdcw; JAN type CM20D391G.	Oscillator tuning capacitor	3K2039143
C11	CAPACITOR, fixed: mica; 300 μμf ±5%; 500 vdcw; JAN type CM20D301J.	Oscillator tuning capacitor	3K2030142
C12	CAPACITOR, fixed: mica; 200 μμf ±5%; 500 vdcw; JAN type CM20C201J.	Oscillator tuning capacitor	3K2020132
C13	CAPACITOR, fixed: mica; 100 μμf ±5%; 500 vcdw; JAN type CM20C101J.	Oscillator tuning capacitor	3K2010132
D, F, G, L	CAPACITOR, fixed: paper; 3 μf; ±15%; 250 vdcw.	D—Cathode bypass capacitor for tube VA. F, G—Screen grid bypass capacitors. With resistor G, form filter in the screen grid circuit. L—Cathode bypass capacitor for tube VA.	3DB3.13
H	CAPACITOR, fixed: paper; 200,000 μμf ±10%; 600 vdcw; JAN type CP75A1AF201K.	Blocking capacitor in the plate circuit of tube VB.	3DA200–5
J	CAPACITOR, fixed: paper 14,500 μμf ±3%; 650 vdcw.	Bypasses a-c components of rectified currents from varistor A.	3DA44.500
N	CAPACITOR, fixed: paper; 400,000 μμf ±15%; 250 vdcw.	Improves the transmission of low-frequency impulses through transformer OUT.	3DA400–3
P	CAPACITOR, fixed: mica; 12,000 μμf ±5%; 300 vdcw.	Filter capacitor in the output circuit of tube VA.	3DA12–4
R	CAPACITOR, fixed: mica; 8200 μμf ±2%; 300 vdcw; JAN type CM35D822G.	Filter capacitor in the output circuit of tube VA.	3K3582243
CURR LIM A, FREQ IND IN.	JACK JJ–085: for 2 cond plug .250" dia.	CURR LIM A—Jack for patching the frequency indicator output of current limiter A. FREQ IND IN—Jack for patching the input of the frequency indicator.	2Z5598A–85
CURR LIM A, LOW TEST LEVEL, NORMAL TEST LEVEL.	JACK JJ–024; for 2 cond plug .250" dia.	CURR LIM B—Jack for patching the frequency indicator output of current limiter B. LOW TEST LEVEL—Jack for patching approximately −50-dbm test level of 2,550 cps. NORMAL TEST LEVEL—Jack for patching approximately −6-dbm test level of 2,550 cps.	2Z5524

10. Signal Data Converter CV–205/FGC–1 (Frequency Indicator Panel)—Continued

Ref symbol	Name of part and description	Function of part	Signal Corps stock No.
FREQ IND OUT.	JACK JJ–042: for 3 cond plug .250″ dia.	Jack for patching the input of the frequency indicator.	2Z5542
METER A-C	JACK, telephone: for 2 cond plug 250″ dia.	Jack for patching the a-c meter	4C4823A
METER D-C	JACK JJ–022: for cond plug .250″ dia	Jack for patching the d-c meter	2Z5522
A	REACTOR: filter choke; .46 hy; 75-ohm dc resistance; HS metal case.	Filter coil in the input circuit of the frequency indicator.	3C1987–84
B, D	REACTOR: filter choke; 3.131 hy; 480-ohm dc resistance; HS metal case.	B—Filter coil in the output circuit for tube Va. D—Discriminator coil.	3C1987–25
C	REACTOR: filter choke; 2.424 hy, 1 ma; 409-ohm dc resistance; HS metal case.	Filter coil in the output circuit for tube VA.	3C1987–03
A	RECTIFIER, metallic: copper oxide; input 67 v single ph; output 45 v dc, 15 amp, full-wave.	Rectifies output tube VB	3H1956–14
M	RECTIFIER, metallic: copper oxide; input 1.5 v ac single ph; output 3 v dc, 15 ma, full-wave.	Full-wave rectifier in the a-c meter circuit.	3H1956–8
A, B	RESISTOR, fixed; WW; 6,000 ohms ±1%; 5 w; 1 tap, 3,000-ohm resistance between tap and ends.	Corrects calibration voltage	3Z6300–30
AA	RESISTOR, fixed: comp; 100,000 ohms ±10%; ½ w; JAN type RC20BF104K.	Grid resistance for tube VD	3RC20BF104K
AB	RESISTOR, fixed: WW; 1,000 ohms ±1%; ¼ w; JAN type RB51B10000F.	Determines the sensitivity and of the a-c meter.	3RB5–1000.4
C	RESISTOR, fixed: WW; 2,800 ohms ±1%; 1 tap, 1,200-ohm and 1,600-ohm resistance between tap and ends.	Corrects the calibration voltage	3Z6160–5
D	RESISTOR, fixed: WW; 1,200 ohms ±1%; 5 w; 1 tap, 400-ohm and 800-ohm resistance between tap and ends.	Corrects the calibration voltage	3Z6080–22
E	RESISTOR, fixed: WW: 300 ohms ±1%; 5 w; 1 tap, 100-ohm, and 200-ohm resistance between tap and ends.	Corrects the calibration voltage	3Z6020–33
F	RESISTOR, fixed: WW; 75-ohms ±1%; 5 w; 1 tap, 25-ohm and 50-ohm resistance between tap and ends.	Corrects the calibration voltage	3Z6005–38
G	RESISTOR, fixed: comp; 10,000 ohms ±10%; 2 w; JAN type RC42BF103K.	With capacitor F, forms a filter for the screen grid of tube VA.	3RC42BF103K
H	RESISTOR, fixed: WW; 30,000 ohms ±1%; ¼ w; JAN type RB51B30001F.	Makes a-c voltage across reactor D cause correct frequency indication.	3RB6–3000
J	RESISTOR, fixed: WW; 20,000 ohms ±1%; ¼ w; JAN type RB51B20001F.	Reduces voltage across resistors A, B, C, D, E, F, and G.	3RB6–2000.7
K	RESISTOR, fixed: WW; 600 ohms ±1%; ¼ w; JAN type RB51B600R0F.	With resistor L, makes LOW TEST LEVEL about −50 dbm.	3RB4–6000.1
L	RESISTOR, fixed: WW; 100,000 ohms ±1%; ¼ w; JAN type RB51B10002F.	With resistor K, makes LOW TEST LEVEL about −50 dbm.	3RB7–1000.9
M	RESISTOR, fixed: WW; 500 ohms ±1% ¼ w; JAN type RB51B500R0F.	Makes NORMAL TEST LEVEL about −6 dbm.	3RB4–5000.1
N	RESISTOR, fixed: comp; 20,000 ohms ±5%; ½ w; JAN type RC20BF203J.	Grid leak for tube VA	3RC20BF203J

10. Signal Data Converter CV–205/FGC–1 (Frequency Indicator Panel)—Continued

Ref symbol	Name of part and description	Function of part	Signal Corps stock No.
P, X, Y	RESISTOR, fixed: WW; 200 ohms ±1%; ¼ w; JAN type RB51B200ROF.	P—Cathode-bias resistor for tube VA. X, Y—With the plate circuit of tube VC, forms a Wheatstone bridge. Current due to unbalance is a measure of the departure of the signal frequencies from their normal values.	3RB4–2000.5
Q	RESISTOR, fixed; comp; 15,000 ohms ±5%; 1 w; JAN type RC30BF153J.	Limits amplitude of oscillation by reducing the plate potential of tube VA.	3RC30BF153J
R	RESISTOR, fixed: comp; 10,000 ohms ±10%; ½ w; JAN type RC20BF103K.	Terminating resistance for the filter	3RC20BF103K
S	RESISTOR, fixed: comp; 1,500 ohms ±10%; ½ w; JAN type RC20BF152K.	Cathode-bias resistor for tube VB	3RC20BF152K
T	RESISTOR, fixed: comp; 510,000 ohms ±5%; ½ w; JAN type RC20BF514J.	Develops grid voltage for tube VC.	3RC20BF514J
U	RESISTOR, fixed: comp; 30,000 ohms ±5%; 1 w; JAN type RC30BF393J.	Plate load resistor for tube VB	3RC30BF303J
V	RESISTOR, fixed: comp; 10,000 ohms ±5% 2 w; JAN type RC42BF103J.	Cathode-bias resistor for tube VC	3RC42BF103J
W	RESISTOR, fixed: WW; 40,000 ohms ±1%; ¼ w; JAN type RB51B40001F.	With the plate circuit of tube VC, forms a Wheatstone bridge. Current due to unbalance is a measure of the departure of the signal frequencies from their normal values.	3RB6–4000.4
Z	RESISTOR, fixed: comp; 300 ohms ±5%; ½ w; JAN type RC20BF301J.	Cathode-bias resistor for tube VD	3RC20BF301J
OUT	RESISTOR, variable: WW; 1,500 ohms ±10%; 3 w; JAN type RA25A1SA125AK.	Adjusts the sensitivity of ALM bell to bell to the frequency variations.	3RA6011
ZERO ADJ	RESISTOR, variable: WW; 20,000 ohms ±10%; 3 w.	Adjusts the input level of the frequency indicator.	2Z7270.136
	SOCKET, electron tube: octal; 1 piece; under chassis mtg; JAN type TSB8T101.	Socket for tubes	2Z8678.326
FREQ IND CAL.	SWITCH, push: cont arrangement 2C	Switches the frequency indicator circuit to the calibrating or measuring condition.	4C5105.47B.1
METER DC AC.	SWITCH, rotary: 2 positions	Switches the meter to measure the audio-power level or dc.	4C5105.52A.1
OSC	TRANSFORMER, AF; input type; impedance ratio between wdg 75–1; HS metal case.	Oscillator tuning coil	2Z9647.5
OUT	TRANSFORMER, AF: plate coupling type; pri, 6,000-ohm impedance; secd, 500-ohm impedance; HS metal case.	Connects the output of tube VD to the alarm bell circuit.	2Z9648.8
VA	TUBE, electron: type 6SA7Y	Oscillator	2J6SA7Y
VB, VC	TUBE, electron: type 6SJ7	VB–A-c amplifier tube VC–D-c amplifier tube	2J6SJ6
VD	TUBE, electron: type 6V6GTY	Amplifies the impulses passing through capacitor M.	2J6V6GTY

11. Spare Fuse Panel

Ref symbol	Name of part and description	Function of part	Signal Corps stock No.
	BOARD, terminal: connects exterior cables to equipment wiring; 32 solder lug term. (4 rows of 8 term. ea).	Connecting point between equipment wiring and exterior cables.	4E9981A.1
	FUSE, indicator alarm: .18 amp, 90–160 v.	Overload protection	3Z2135R
	FUSE, indicator alarm: 5 amp, 90–150 v.	Overload protection	3Z2135N
	FUSEHOLDER: block type; accom 4 cartridge-type fuses.	Holds four spare cartridge-type fuses	3Z3285–7
	FUSEHOLDER: block type; accom 7 indicator alarm fuses.	Holds seven spare indicator alarm fuses	3Z3285–1

12. Telegraph Repeater TH–11/FGC–1 (Receive Relay Panel)

Ref symbol	Name of part and description	Function of part	Signal Corps stock No.
	BOARD, terminal: mts receiver relay; 8 solder lug term.; $2\frac{31}{64}''$ lg x $2\frac{1}{32}''$ wd x $1\frac{25}{32}''$ thk.	Mounts REC relay	4E318B
A, B	CAPACITOR, fixed: paper; 500,000 $\mu\mu$f $\pm 15\%$; 600 vdcw; JAN type CP77A1HF504L.	A—With resistor H, provides spark protection for the S contact of the REC relay. B—With resistor H, provides spark protection for contact 1B of relay A.	3DA500–505
A	RELAY, armature: 1 inductive wdg; 2000 ohms $\pm 10\%$.	Operated by the closure of a contact in the radio receiver cabinet. Actuates the monitoring circuit, operating relay C and connecting the holding circuits to relay REC and the loop.	4C8920.567
B	RELAY, armature: 1 inductive wdg; dc, 1300 ohms $\pm 10\%$.	Released by a steady mark signal. Releases relays A and B.	4C8939.159
C	RELAY, armature: 1 inductive wdg; dc, 2000 ohms $\pm 5\%$; .017 amp oper cur.	Transfers control of relay B to armature of relay REC.	4C8920.1129
REC	RELAY, armature: SPDT; 2 inductive wdg; dc, 136-ohm resistance ea wdg, 5 ma dc oper cur.	Operated by signals from the detectors; sends d-c polar signals into the loop circuit.	4TRY30
A	RESISTOR, fixed: WW; 6905 ohms $\pm 1\%$; 5 w; 1 tap, 1705-ohm and 5200-ohm resistance between tap and ends.	Controls the holding current to the correct value in relay REC.	3Z6502
B	RESISTOR, fixed; WW; 2898 ohms $\pm 1\%$; 5 w.	With resistor C, forms the meter shunt	3Z6289H8
C	RESISTOR, fixed: WW; 124 ohms $\pm 1\%$; 5 w; 1 tap, 62-ohm resistance between tap and ends.	With resistor B, forms the meter shunt	3Z6006B2–1
D, E, M	RESISTOR, fixed: WW; 120 ohms $\pm 5\%$; 5 w.	D, E—Limit the maximum current from the disk-type rectifier. M—Takes the place of resistor D when monitor circuit is locked.	3Z6012–6
F	RESISTOR, fixed: WW; 3000 ohms $\pm 2\%$; 5 w.	Gives the correct value of operating current for relay A.	3Z6300–39
G	RESISTOR, fixed: WW; 1400 ohms $\pm 1\%$; 5 w; 1 tap, 100-ohm and 1300-ohm resistance between tap and ends.	Gives the correct value of the holding current in the loop circuit.	3Z6130–1

12. Telegraph Repeater TH–11/FGC–1 (Receive Relay Panel)—Continued

Ref symbol	Name of part and description	Function of part	Signal Corps stock No.
H	RESISTOR, fixed: WW; 3200 ohms ±5%; 5 w; 1 tap, 1600-ohm resistance between tap and ends.	With capacitors A and B, forms spark protection for the contacts of relay REC.	3Z6160–4
J, K	RESISTOR, fixed: WW; 3500 ohms ±1%; 5 w; 1 tap, 1100-ohm and 2400-ohm resistance between tap and ends.	J and K—Form a voltage divider circuit to make an effective polar loop circuit.	3Z6240–10
L	RESISTOR, fixed: WW; 3611.6 ohms ±½%; 5 w; 1 tap, 102.6-ohm and 3509-ohm resistance between tap and ends.	Gives the correct value of the operating current for relay C.	3Z6350–9
N	RESISTOR, fixed: WW; 2200 ohms ±1%; 5 w.	Limits current through the winding of relay B to give the correct operating current for relay B.	3Z6220–9
REC 88D FILTER.	SUPPRESSOR, electrical noise: capacitor and coil type.	Prevents interference to radio receivers	3Z1892–5
TST	SWITCH, rotary: 2C; 2 sect	Opens the holding circuit of relay REC	4C5105.52A.1

13. Terminal Box J–447/FGC–1 (Utility Outlet and Heater Panel)

Ref symbol	Name of part and description	Function of part	Signal Corps stock No.
	CABLE, power, electrical: general use portable cable; 4 #16 AWG stranded cond.	Power cord; connects equipment to a-c power.	1B3016-4.6
	CONDUIT FITTING: armored cable box connector; ½″ IPT; screw in connection.	Holds the cord in the outlet box and in the four-conductor plug.	6Z3178
	CONNECTOR, plug: 4 flat male cont polarized.	Used on the power cord	6Z7591–5
	CONNECTOR, receptacle: 4 flat double *T* female cont; straight type.	A-c supply for the rectifier and the appliances.	6Z7786–1
	LAMP, incandescent: 240 v, 50 w; med screw base.	Heater lamp	6Z6840
	LAMP, incandescent: 120 v, 50 w; med screw base.	Heater lamp	6Z6820–1
	LAMPHOLDER: med screw base	Holder for heater lamps	6Z8357–1.1

14. Trigger Amplifier AM–591/FGC–1 (Detector Panel)

Ref symbol	Name of part and description	Function of part	Signal Corps stock No.
A	CAPACITOR, fixed: paper; 3,000 μμf ±20%; 800 vdcw; JAN type CN35A302M.	With resistors ME and SE, controls the speed of response of the noise suppression circuit.	3DA3–34.2
MA, SA	CAPACITOR, fixed: paper; 2 μf ±15%; 250 vdcw; JAN type CP76A1HD205L.	MA—Cathode bypass capacitor for tube MVA. SA—Cathode bypass capacitor for tube SVA.	3DB2–117
MB, SB	CAPACITORS, fixed: paper; 25,000 μμf +2% −4%; 650 vdcw.	MB—Forms a shunt path for the a-c components from varistor M DET. SB—Forms a shunt path for the a-c components from varistor S DET.	3DA25–8

14. Trigger Amplifier AM-591/FGC-1 (Detector Panel)—Continued

Ref symbol	Name of part and description	Function of part	Signal Corps stock No.
VA, VB, VC, MVA, SVA.	ELECTRON TUBE: type 6SJ7	VA and VC—Control the screen grid potentials of tubes MUB and SUB. VB—Controls the plate current of tube VA. MVA—Amplifies mark signals SVA—Amplifies space signals	2J6SJ7
M CH	FILTER, band pass: 2125 cps oper freq, 1770–2480 cps.	Passes mark signals from the current limiter to the mark detector.	3Z1892–3.24
S CH	FILTER, band pass: 2620–3330 cys	Passes the space signal from the current limiter to the space detector.	3Z1892–3.25
CH FILTS, PAD, M DET, S DET.	JACK, telephone: for 2 cond plug .205″ dia.	CH FILTS IN—For patching to the inputs of MCH and SCH filters in parallel. CH FILTS OUT—For patching to the output of MCH filter. PAD IN—For patching to the input of the 9-db pad. PAD OUT—For patching to the output of the 9-db pad. S DET IN—For patching to the input of the space detector. S DET OUT—For patching to the current limiter output. M DET IN—For patching to the input of the mark filter. M DET OUT—For patching to the output of SCH filter.	4C4904.10A
M DET, S DET.	RECTIFIER, metallic: copper oxide; input 67 v rms, single ph; output 45 v dc; 15 ma, full-wave.	M DET and S DET—Rectify mark and space signals.	3H4956–14
A	RESISTOR, fixed: WW; 568 ohms ±1%; 5 w; 1 tap, 284-ohm resistance between tap and ends.	Series member of the 9-db pad	3Z6028D4
B	RESISTOR, fixed: WW; 490 ohms ±1%; 5 w; 1 tap, 240-ohm and 250-ohm resistance between tap and ends.	Shunt member of the 9-db pad	3Z6025–30
C	RESISTOR, fixed: WW; 350 ohms ±1%; 5 w.	In the cathode-bias circuit for tubes MVB, SVB, VB, and VC.	3Z6035–10
D, F	RESISTOR, fixed: WW; 20 ohms ±5%; 1 tap, 10-ohm resistance between tap and ends.	In the cathode-bias circuit for tubes MVB, SVB, VB, and VC.	3Z6001–23
E	RESISTOR, fixed: WW; 1,000 ohms ±1%; 5 w.	In the cathode-bias circuit for tubes MVB, SVB, VB, and VC.	3Z6100–89
G	RESISTOR, fixed: WW; 185 ohms ±1%; 5 w; 1 tap, 75-ohm and 110-ohm resistance between tap and ends.	In the cathode-bias circuit for tubes MVB, SVB, VB, and VC. Two sections: 75 and 110 ohms (75-ohm section not used).	3Z6011–3
H	RESISTOR, fixed: WW; 6,000 ohms ±1%; 5 w; 1 tap, 3,000 ohms between tap and ends.	Varies the potential on the screen grids of tubes MVB and SVB under the control of the tubes in the noise-suppression circuits.	3Z6300–30
J	RESISTOR, fixed: comp; 15,000 ohms ±5%; 2 w; JAN type RC42BF153J.	Limits the voltage on the screen grid of tube VA.	3RC42BF153J
L, MB, SB	RESISTOR, fixed: comp; 560 ohms ±5%; ½ w; JAN type RC20BF561J.	L—Cathode-bias resistor for tube VB. MB—Cathode-bias resistor for tube MVA. SB—Cathode-bias resistor for tube SVA.	3RC20BF561J

14. Trigger Amplifier AM–591 FGC–1 (Detector Panel)—Continued

Ref symbol	Name of part and description	Function of part	Signal Corps stock No.
M	RESISTOR, fixed: comp; 2000 ohms ±5%; ½ w; JAN type RC20BF202J.	Cathode-bias resistor for tube VA	3RC20BF202J
MA, SA	RESISTOR, fixed: WW; 5000 ohms ±1%; ¼ w; JAN type RB51B50000F.	MA—With variable resistor, ADJ REC GAIN, forms the correct impedence termination for transformer M IN and results in a favorable sensitivity adjustment of the mark detector. SA—With variable resistor, ADJ S REC GAIN, forms the correct impedance termination for transformer S IN and results in a favorable sensitivity adjustment of the space detector.	3RB5–5000
MC, SC	RESISTOR, fixed: WW; 50,000 ohms ±1%; ¼ w; total resistance; JAN type RB51B50001F.	MC—Load resistor for varistor M DET. SC—Load resistor for varistor S DET.	3RB6–5000.1
MD, SD	RESISTOR, fixed: comp; 100,000 ohms ±10%; ½ w; JAN type RC20-BF104K.	MD—Limits the plate current in tube MWB when the signal makes the control grid positive. SC—Limits the plate current in tube SVB when the signal makes the control grid positive.	3RC20BF104K
ME, SE, R	RESISTOR, fixed: comp; 1 meg ±5%; ½ w; JAN type RC20BF105J.	ME—Controls the potential from the mark detector to the input of the noise-suppression circuit. SE—Controls the potential from the space detector to the input of the noise-suppression circuit. R—With resistor P, forms a potentiometer in the supply circuit to the control grid of tube VA.	3RC20BF105J
N	RESISTOR, fixed' comp; 30,000 ohms ±5%; 2 w; JAN type RC42BF303J.	Plate current of tube VB through resistor N reduces the potential on the control grid of tube VA.	3RC42BF303J
P	RESISTOR, fixed: comp; 2 meg ±5%; ½ w; JAN type RC20BF205J.	With resistor R, forms a potentiometer in the supply circuit to the control grid of tube VA.	3RC20BF205J
ADJ M REC GAIN ADJ S REC GAIN.	RESISTOR, variable: WW; 20,000 ohms ±10%; 3 w.	ADJ M REC GAIN—To adjust the mark detector sensitivity. ADJ S REC GAIN—To adjust the space detector sensitivity.	2Z7270.136
	SOCKET, electron tube: octal; 1 piece, under chassis mtg; JAN type TSB8T101.	Sockets for tubes VA, VB, VC, MVA, SVA, SVB, and MWB.	2Z8678.326
ADJ REC GAIN.	SWITCH, push: cont arrangement 2C	Inserts a 9-db pad for testing and adjusting.	4C5105.47B.1
M IN, S IN	TRANSFORMER, AF: input type; pri, 600-ohm impedance; secd, 25,000-ohm impedance; metal case, silicon steel core.	M IN—Connects the output of the MCH filter to the input circuit of tube MVA. S IN—Conncets the output of SCH filter to the input circuit of tube SVA.	2Z9647.4
M OUT, S OUT	TRANSFORMER, AF: plate coupling type; pri, 150,000-ohm impedance; secd, 50,000-ohm impedance; metal case, silicon steel core.	M OUT—Connects tube MVA to varistor M DET. S OUT—Connects tube SVA to varistor S DET.	2Z9648.3
MVB, SVB	TUBE, electron: type 6V6GTY	Amplify rectified output of rectifier (varistor) M DET.	2J6V6GTY

15. Under Voltage Alarm BZ–27/FGC–1 (Alarm and Miscellaneous Panel)

Ref symbol	Name of part and description	Function of part	Signal Corps stock No.
ALM	BELL, electrical: vebrating type; one 3″ dia gong; oper power requirements, 25–50 v 60 cyc, 14–40 v, .160 amp dc.	Operates when the frequency is outside the predetermined limits.	4Z1107A
	BOARD, terminal: for mtg resistors	For mounting and connecting resistors E, F, G, and H.	2Z9408.10
FA	BUZZER: vibrating type; oper power requirements, 4–9 v, 60 cyc, 2–4 v approx .100 amp dc.	Indicates that a fuse is operated	4Z3118.3
	COVER, electrical relay: covers R-type relays.	Cover for relays P and T	4C3101
P, T	RELAY, armature: cont arrangement 2A; single inductive wdg, dc, 6.6 ma, 5000-ohm resistance.	P—Operates when a PLT fuse operates, thereby closing the circuit to energize the buzzer. T—Operates when a TELEG fuse operates, thereby closing the circuit to energize the buzzer.	4C8827.291
A1	RESISTOR, fixed: WW; 2898 ohms ±1%; 5.1 w.	With resistor B1, causes the meter to indicate full scale with a 50-ma loop current.	3Z6289H8
B1	RESISTOR, fixed: WW; 60.5 ohms ±1%; 5 w; 1 tap, 28.5-ohm and 32-ohm resistance between tap and ends.	With resistor A1, causes the meter to indicate full scale with a 50-ma loop current.	3Z6003B2
C1, C2	RESISTOR, fixed: WW; 60 ohms ±1%; resistance 5 w.	C1—With resistor D1, causes the meter to indicate full scale with 20 ma through the SPR A jack. C2—With resistor D2, causes the meter to indicate full scale with 20 ma through the SPR B jack.	3Z6006–10
D1, D2	RESISTOR, fixed: WW; 1111 ohms ±1%; 5 w; 1 tap, 191-ohm and 920-ohm resistance between tap and ends.	D1—With resistor C1, causes the meter to indicate full scale with 20 ma through the SPR A jack. D2—With resistor C2, causes the meter to indicate full scale with 20 ma through the SPR B jack.	3Z6092
E, F, G, H	RESISTOR, fixed: WW; 100,000 ohms ±1%; ¼ w; JAN type RB51B10002F	E—With resistor F, causes the meter to indicate full scale in the PLT V or TST jack for a 200-volt plate voltage. F—With resistor E, causes the meter to indicate full scale in the PLT V TST jack for a 200-volt plate voltage. G—With resistor H, causes the meter to read full scale in the TLG V TST jack for a 200-volt telegraph voltage. H—With resistor G, causes the meter to read full scale in the TLG V TST jack for a 200-volt telegraph voltage.	3RB7—1000.9

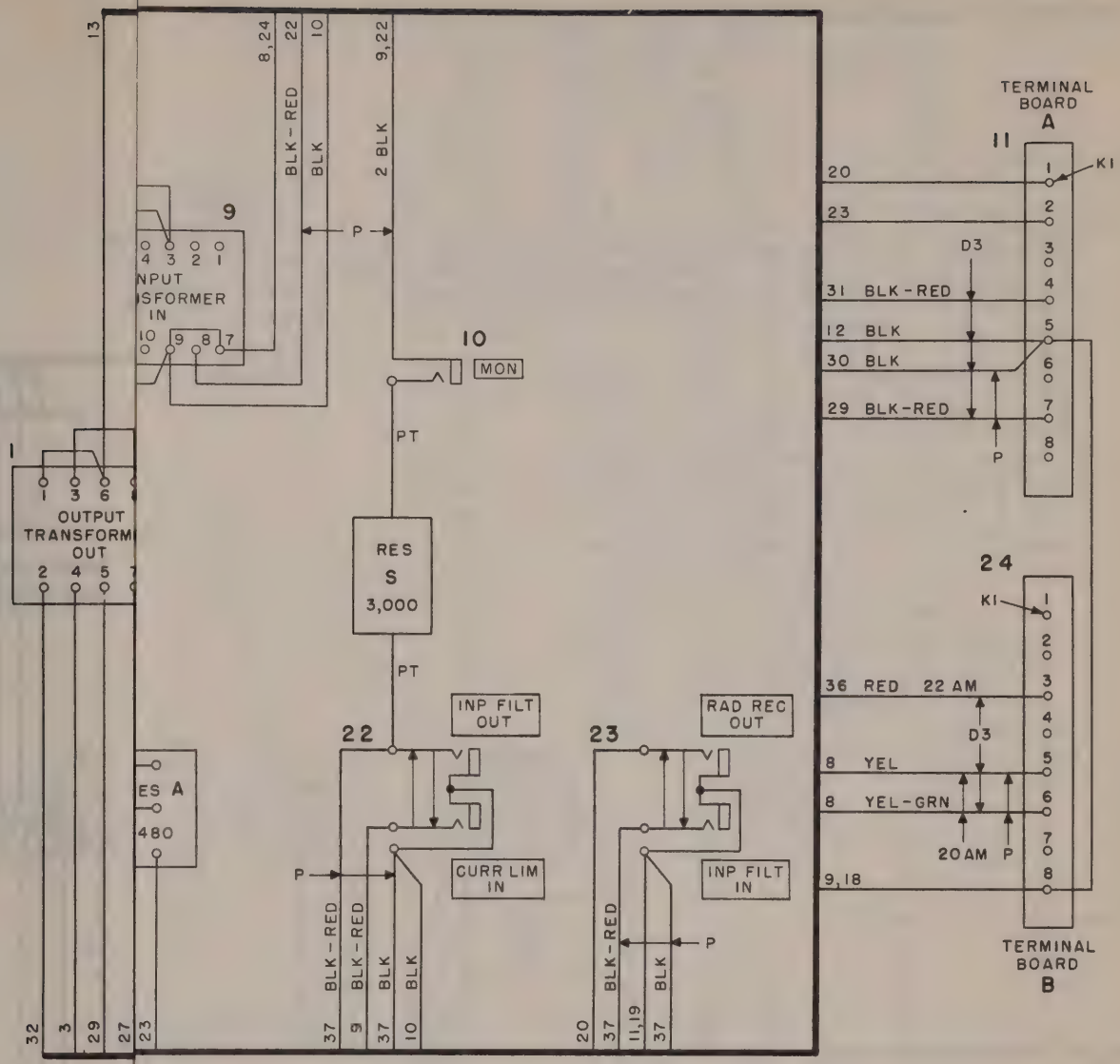

NOTES

IRES NOT OTHERWISE SPECIFIED ARE "D1."

D1" WIRING IS BLK 22 AM WIRE UNLESS OTHERWISE SPECIFIED, RUN IRECTLY FROM TERMINAL TO TERMINAL IN THE SHORTEST POSSIBLE ANNER AND INDEPENDENT OF ALL OTHER LEADS.

D3" WIRING RUN LOOSE AND DRESSED BACK AGAINST THE MOUNTING NIT IN THE MOST CONVENIENT MANNER.

PT" LEADS FURNISHED AS PART OF APPARATUS. AT LEAST 3/4" SLACK HALL BE LEFT IN EACH "PT" LEAD.

P" DENOTES PAIR.

LL STRAPS ARE BLK, 22AM WIRE EXCEPT WHERE BARE STRAPS ARE ERMISSIBLE.

HE SMALL DESIGNATION NUMBER AT THE BEGINNING OF EACH FEED LINE ADJACENT TO THE COMMON OR "AIR LINE") CORRESPONDS TO THE LARGE ESIGNATION NUMBER OF THE PIECE OF APPARATUS TO WHICH THE FEED INE RUNS. FOR EXAMPLE, THE FEED LINE NUMBERED 36 STARTING AT PPARATUS NUMBERED 24 CONNECTS TO THE APPARATUS NUMBERED 36, T WHICH POINT THIS FEED LINE IS NUMBERED 24. THE COLORING SERVES S FURTHER IDENTIFICATION.

NLESS OTHERWISE SPECIFIED:
RESISTORS ARE IN OHMS,
CAPACITORS ARE IN UF.

TM 356-58

15. Under Voltage Alarm BZ–27/FGC–1 (Alarm and Miscellaneous Panel)

Ref symbol	Name of part and description	Function of part	Signal Corps stock No.
ALM	BELL, electrical: vebrating type; one 3″ dia gong; oper power requirements, 25–50 v 60 cyc, 14–40 v, .160 amp dc.	Operates when the frequency is outside the predetermined limits.	4Z1107A
	BOARD, terminal: for mtg resistors	For mounting and connecting resistors E, F, G, and H.	2Z9408.10
FA	BUZZER: vibrating type; oper power requirements, 4–9 v, 60 cyc, 2–4 v approx .100 amp dc.	Indicates that a fuse is operated	4Z3118.3
	COVER, electrical relay: covers R-type relays.	Cover for relays P and T	4C3101
P, T	RELAY, armature: cont arrangement 2A; single inductive wdg, dc, 6.6 ma, 5000-ohm resistance.	P—Operates when a PLT fuse operates, thereby closing the circuit to energize the buzzer. T—Operates when a TELEG fuse operates, thereby closing the circuit to energize the buzzer.	4C8827.291
A1	RESISTOR, fixed: WW; 2898 ohms ±1%; 5.1 w.	With resistor B1, causes the meter to indicate full scale with a 50-ma loop current.	3Z6289H8
B1	RESISTOR, fixed: WW; 60.5 ohms ±1%; 5 w; 1 tap, 28.5-ohm and 32-ohm resistance between tap and ends.	With resistor A1, causes the meter to indicate full scale with a 50-ma loop current.	3Z6003B2
C1, C2	RESISTOR, fixed: WW; 60 ohms ±1%; resistance 5 w.	C1—With resistor D1, causes the meter to indicate full scale with 20 ma through the SPR A jack. C2—With resistor D2, causes the meter to indicate full scale with 20 ma through the SPR B jack.	3Z6006–10
D1, D2	RESISTOR, fixed: WW; 1111 ohms ±1%; 5 w; 1 tap, 191-ohm and 920-ohm resistance between tap and ends.	D1—With resistor C1, causes the meter to indicate full scale with 20 ma through the SPR A jack. D2—With resistor C2, causes the meter to indicate full scale with 20 ma through the SPR B jack.	3Z6092
E, F, G, H.	RESISTOR, fixed: WW; 100,000 ohms ±1%; ¼ w; JAN type RB51B10002F	E—With resistor F, causes the meter to indicate full scale in the PLT V or TST jack for a 200-volt plate voltage. F—With resistor E, causes the meter to indicate full scale in the PLT V TST jack for a 200-volt plate voltage. G—With resistor H, causes the meter to read full scale in the TLG V TST jack for a 200-volt telegraph voltage. H—With resistor G, causes the meter to read full scale in the TLG V TST jack for a 200-volt telegraph voltage.	3RB7—1000.9

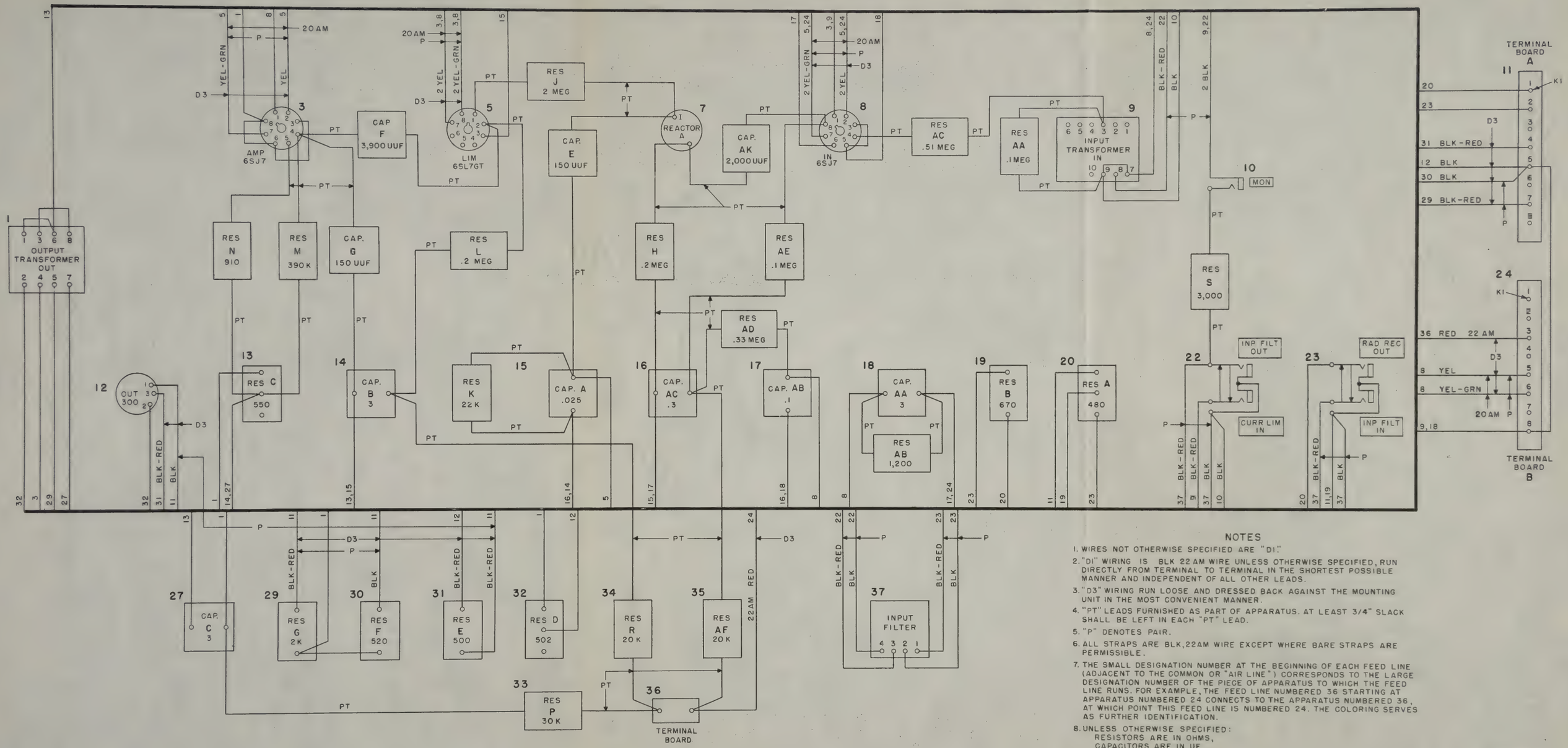

NOTES

1. WIRES NOT OTHERWISE SPECIFIED ARE "D1."
2. "D1" WIRING IS BLK 22 AM WIRE UNLESS OTHERWISE SPECIFIED, RUN DIRECTLY FROM TERMINAL TO TERMINAL IN THE SHORTEST POSSIBLE MANNER AND INDEPENDENT OF ALL OTHER LEADS.
3. "D3" WIRING RUN LOOSE AND DRESSED BACK AGAINST THE MOUNTING UNIT IN THE MOST CONVENIENT MANNER.
4. "PT" LEADS FURNISHED AS PART OF APPARATUS. AT LEAST 3/4" SLACK SHALL BE LEFT IN EACH "PT" LEAD.
5. "P" DENOTES PAIR.
6. ALL STRAPS ARE BLK, 22AM WIRE EXCEPT WHERE BARE STRAPS ARE PERMISSIBLE.
7. THE SMALL DESIGNATION NUMBER AT THE BEGINNING OF EACH FEED LINE (ADJACENT TO THE COMMON OR "AIR LINE") CORRESPONDS TO THE LARGE DESIGNATION NUMBER OF THE PIECE OF APPARATUS TO WHICH THE FEED LINE RUNS. FOR EXAMPLE, THE FEED LINE NUMBERED 36 STARTING AT APPARATUS NUMBERED 24 CONNECTS TO THE APPARATUS NUMBERED 36, AT WHICH POINT THIS FEED LINE IS NUMBERED 24. THE COLORING SERVES AS FURTHER IDENTIFICATION.
8. UNLESS OTHERWISE SPECIFIED:
   RESISTORS ARE IN OHMS,
   CAPACITORS ARE IN UF.

TM 356-58

FIGURE 52.—*Current Regulator CN-164/FGC-1 (current limiter), wiring diagram.*

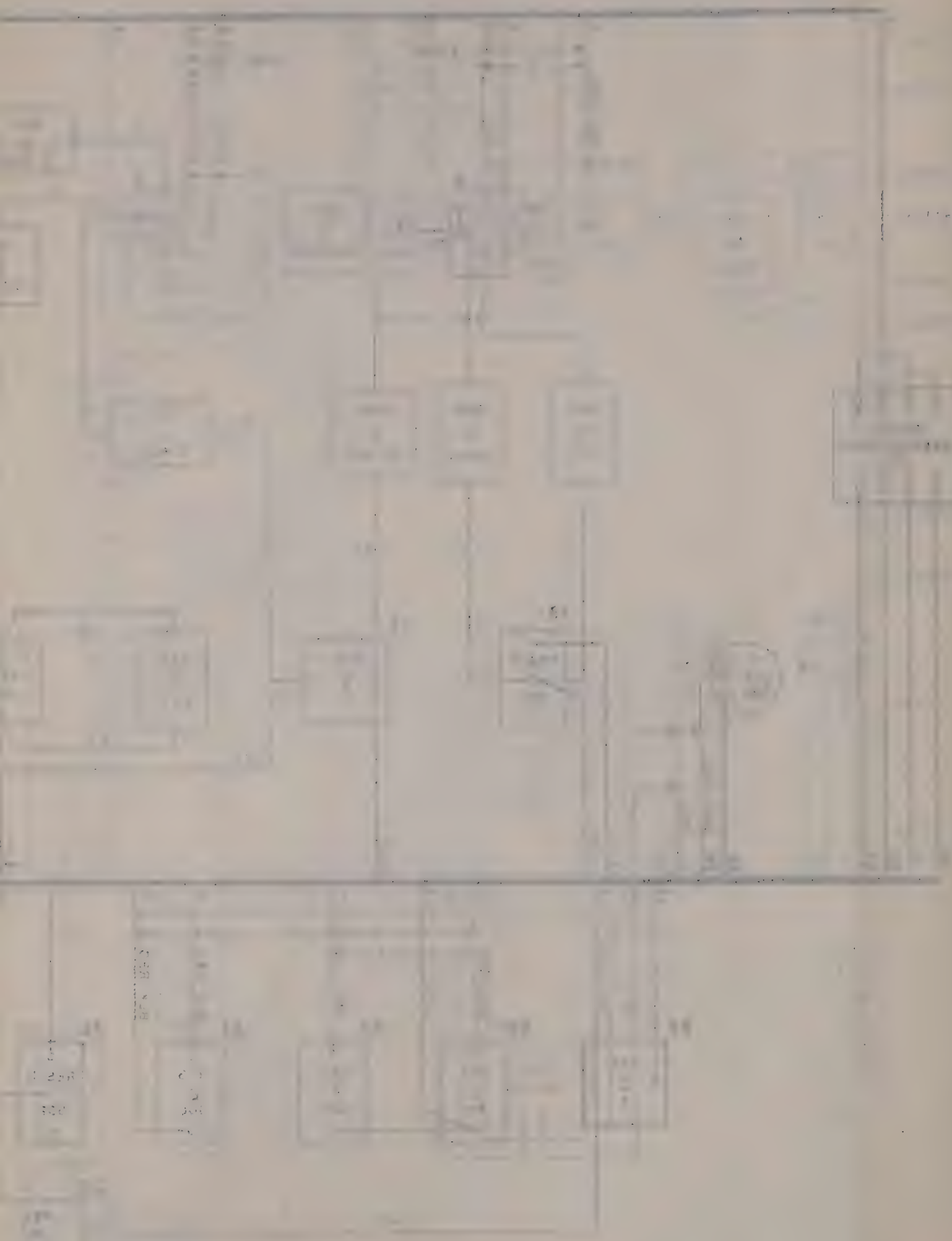

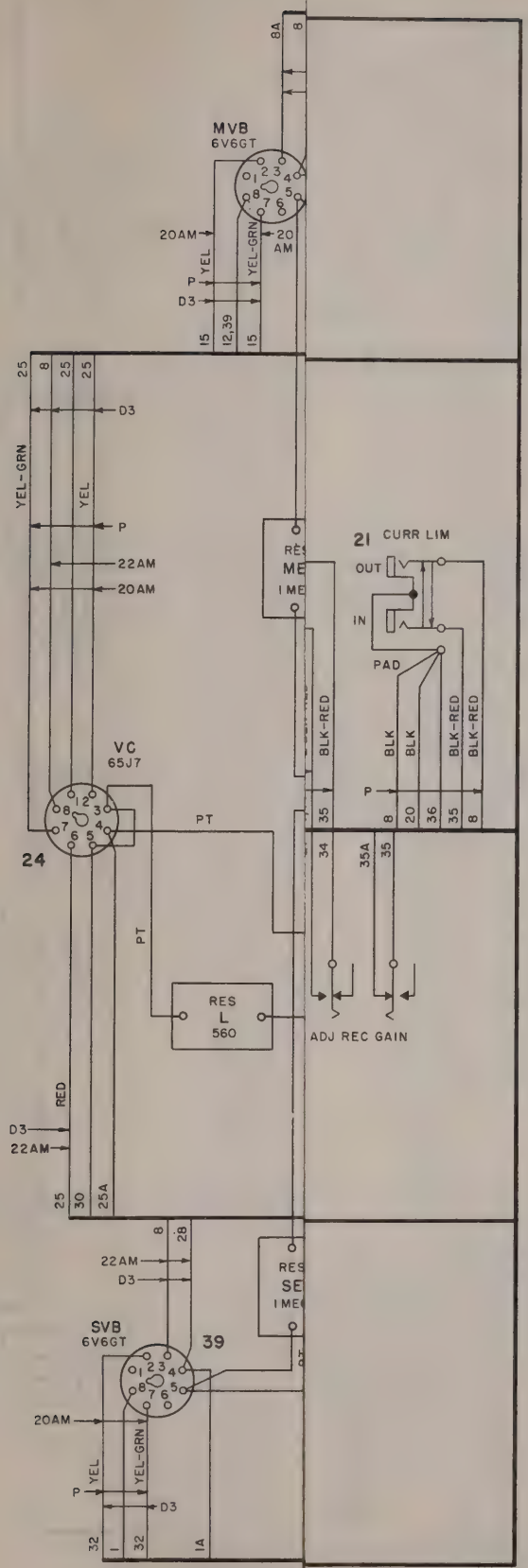

NOTES:

1. WIRES NOT OTHERWISE SPECIFIED ARE BLACK, 22AM WIRE, RUN DIRECTLY FROM TERMINAL TO TERMINAL IN THE SHORTEST POSSIBLE MANNER, AND INDEPENDENT OF ALL OTHER LEADS.
2. P DENOTES PAIR.
3. PT DENOTES LEADS FURNISHED AS PART OF THE APPARATUS.
4. D3 WIRING IS 20AM WIRE RUN LOOSE AND DRESSED BACK AGAINST THE PANEL IN THE MOST CONVENIENT MANNER.
5. J DENOTES THE TOP OR LEFT SIDE OF SWITCHES WHEN LOOKING AT THE TERMINAL ENDS OF THE SWITCHES.
6. UNLESS OTHERWISE SHOWN, RESISTORS ARE IN OHMS, CAPACITORS ARE IN UF.
7. ALL STRAPS ARE BLACK, 22AM WIRE EXCEPT WHERE BARE STRAPS ARE PERMISSABLE.
8. ⬭ DENOTES SHIELD.
9. U DENOTES SHIELDED WIRE.
10. GT DENOTES GROUND TRACER UNDER, AND PART OF SHIELD.
11. THE SMALL DESIGNATION NUMBER AT THE BEGINNING OF EACH FEED LINE (ADJACENT TO THE COMMON OR AIR LINE) CORRESPONDS TO NUMBER OF THE PIECE OF APPARATUS TO WHICH THE FEED LINE RUNS. FOR EXAMPLE, THE FEED LINE NUMBERED 15 STARTING AT APPARTUS NUMBERED 1, CONNECTS TO THE APPARATUS NUMBERED 15, AT WHICH POINT THIS FEED LINE IS NUMBERED 1. COLORING SERVES AS FURTHER IDENTIFICATION.

TM 356-62

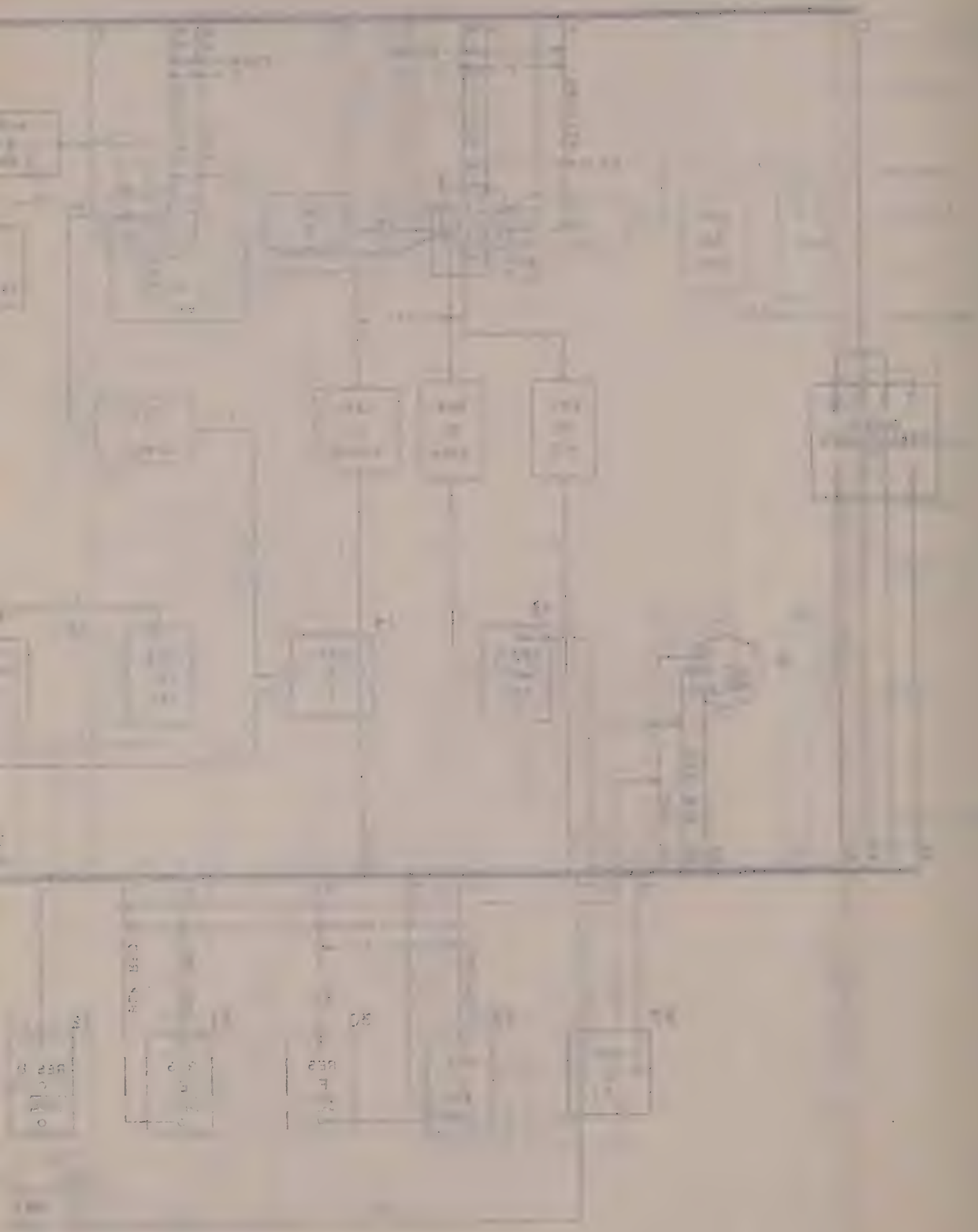

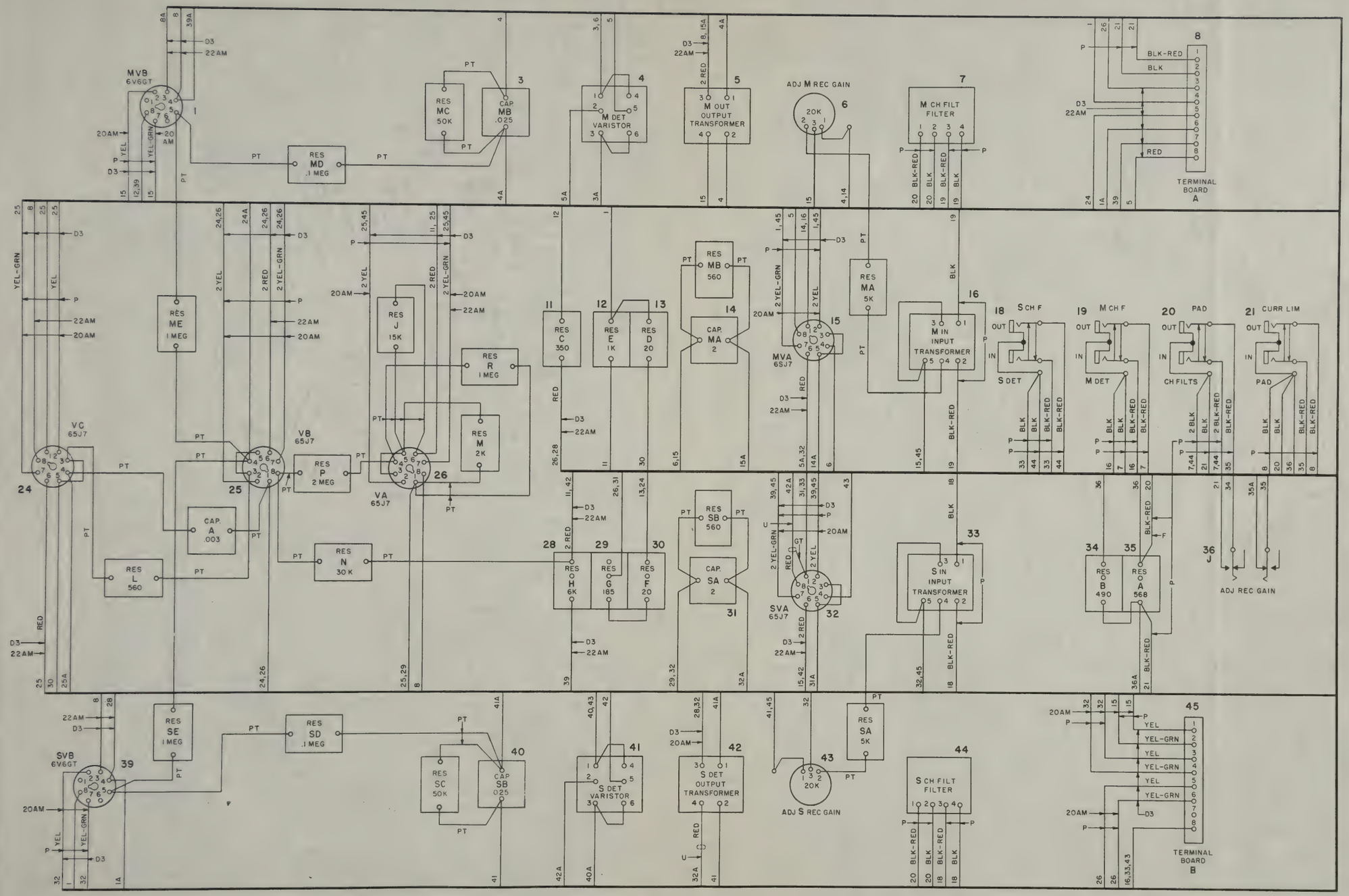

NOTES:

1. WIRES NOT OTHERWISE SPECIFIED ARE BLACK, 22AM WIRE, RUN DIRECTLY FROM TERMINAL TO TERMINAL IN THE SHORTEST POSSIBLE MANNER, AND INDEPENDENT OF ALL OTHER LEADS.
2. P DENOTES PAIR.
3. PT DENOTES LEADS FURNISHED AS PART OF THE APPARATUS.
4. D3 WIRING IS 20AM WIRE RUN LOOSE AND DRESSED BACK AGAINST THE PANEL IN THE MOST CONVENIENT MANNER.
5. J DENOTES THE TOP OR LEFT SIDE OF SWITCHES WHEN LOOKING AT THE TERMINAL ENDS OF THE SWITCHES.
6. UNLESS OTHERWISE SHOWN, RESISTORS ARE IN OHMS, CAPACITORS ARE IN UF.
7. ALL STRAPS ARE BLACK, 22AM WIRE EXCEPT WHERE BARE STRAPS ARE PERMISSABLE.
8. ⊃ DENOTES SHIELD.
9. U DENOTES SHIELDED WIRE.
10. GT DENOTES GROUND TRACER UNDER, AND PART OF SHIELD.
11. THE SMALL DESIGNATION NUMBER AT THE BEGINNING OF EACH FEED LINE (ADJACENT TO THE COMMON OR AIR LINE) CORRESPONDS TO NUMBER OF THE PIECE OF APPARATUS TO WHICH THE FEED LINE RUNS. FOR EXAMPLE, THE FEED LINE NUMBERED 15 STARTING AT APPARTUS NUMBERED 1, CONNECTS TO THE APPARATUS NUMBERED 15, AT WHICH POINT THIS FEED LINE IS NUMBERED 1. COLORING SERVES AS FURTHER IDENTIFICATION.

TM 356-62

FIGURE 53.—*Trigger Amplifier AM–591/FGC–1 (detector panel), wiring diagram.*

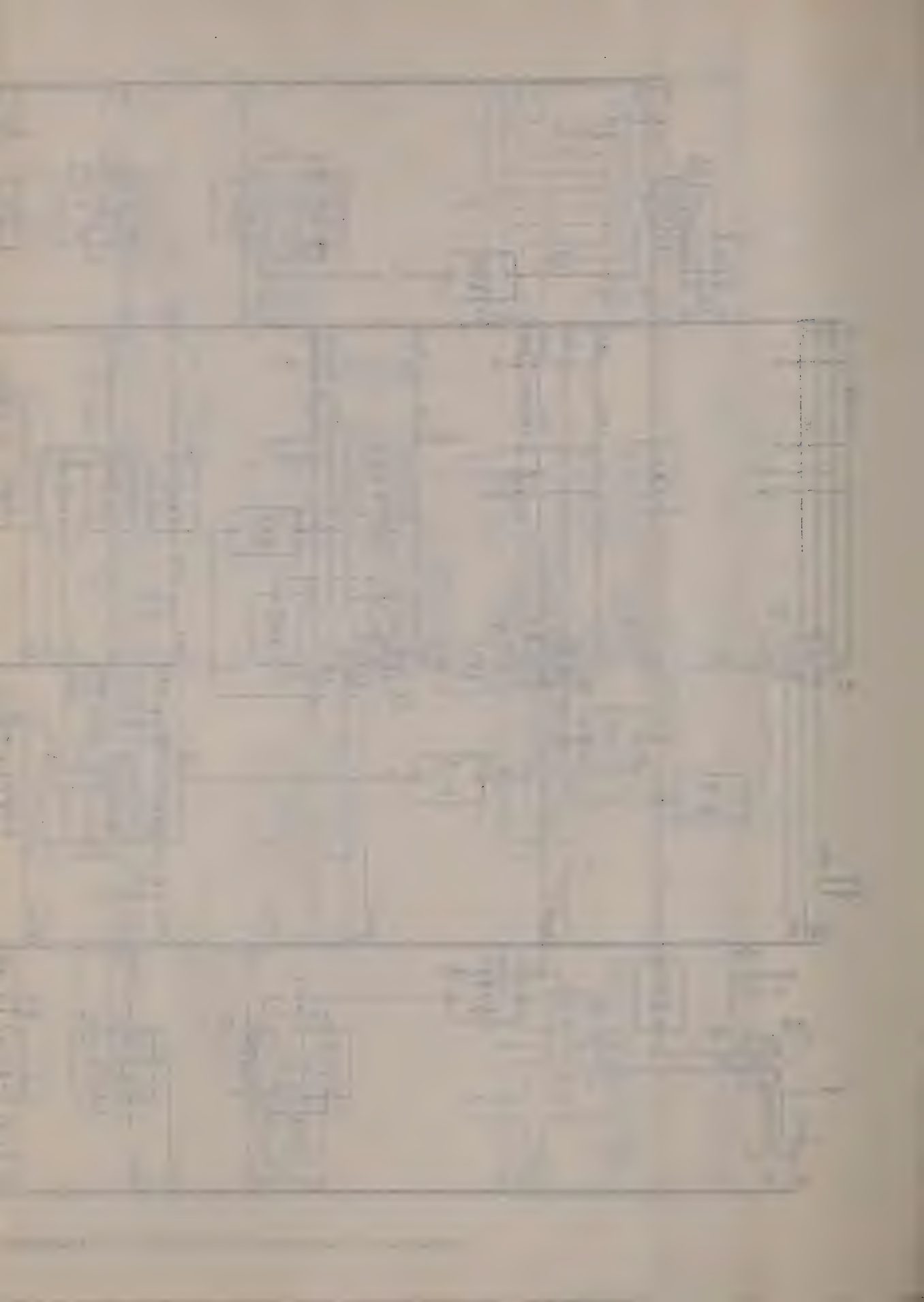

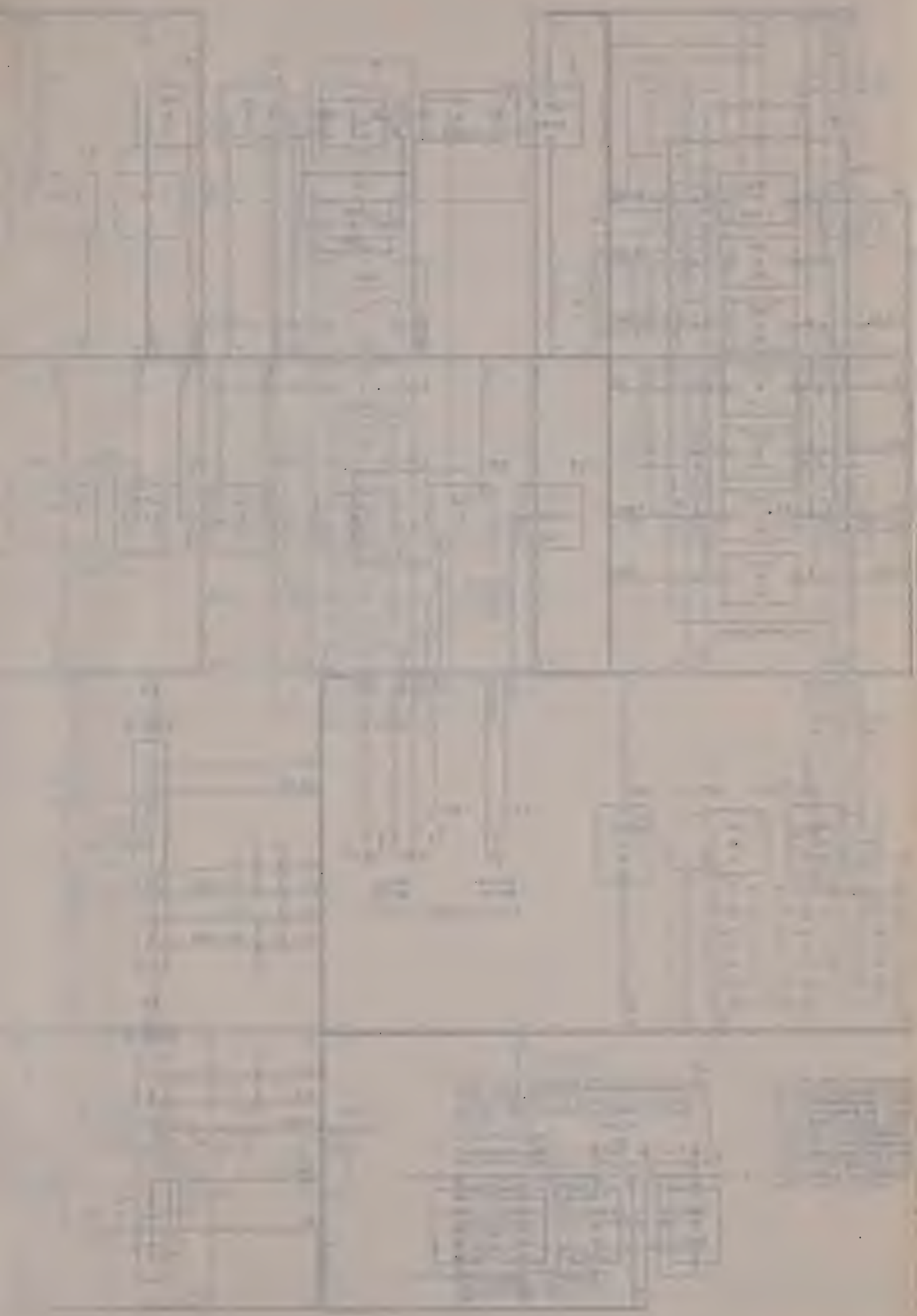

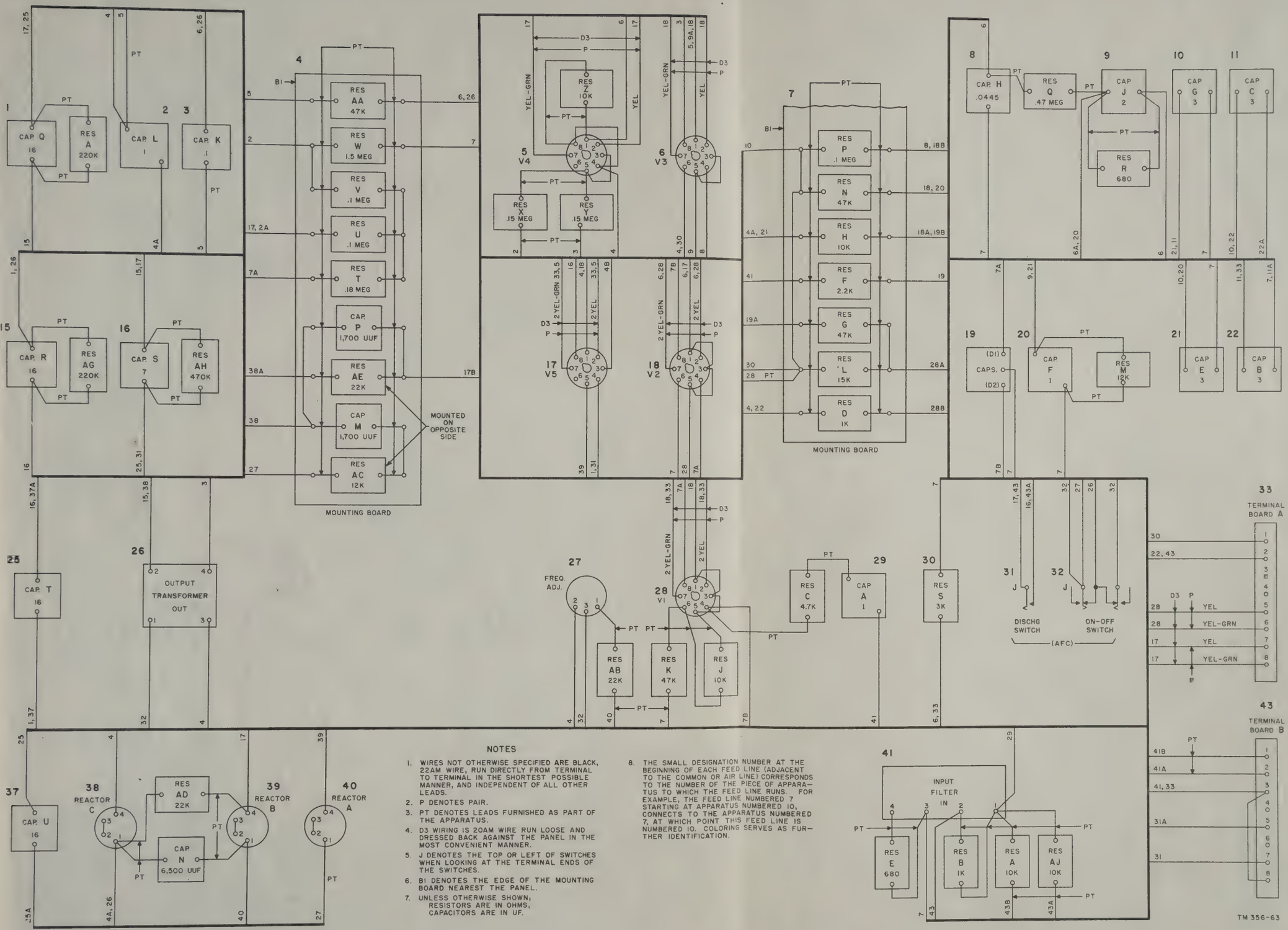

NOTES

1. WIRES NOT OTHERWISE SPECIFIED ARE BLACK, 22AM WIRE, RUN DIRECTLY FROM TERMINAL TO TERMINAL IN THE SHORTEST POSSIBLE MANNER, AND INDEPENDENT OF ALL OTHER LEADS.
2. P DENOTES PAIR.
3. PT DENOTES LEADS FURNISHED AS PART OF THE APPARATUS.
4. D3 WIRING IS 20AM WIRE RUN LOOSE AND DRESSED BACK AGAINST THE PANEL IN THE MOST CONVENIENT MANNER.
5. J DENOTES THE TOP OR LEFT OF SWITCHES WHEN LOOKING AT THE TERMINAL ENDS OF THE SWITCHES.
6. BI DENOTES THE EDGE OF THE MOUNTING BOARD NEAREST THE PANEL.
7. UNLESS OTHERWISE SHOWN, RESISTORS ARE IN OHMS, CAPACITORS ARE IN UF.
8. THE SMALL DESIGNATION NUMBER AT THE BEGINNING OF EACH FEED LINE (ADJACENT TO THE COMMON OR AIR LINE) CORRESPONDS TO THE NUMBER OF THE PIECE OF APPARATUS TO WHICH THE FEED LINE RUNS. FOR EXAMPLE, THE FEED LINE NUMBERED 7 STARTING AT APPARATUS NUMBERED 10, CONNECTS TO THE APPARATUS NUMBERED 7, AT WHICH POINT THIS FEED LINE IS NUMBERED 10. COLORING SERVES AS FURTHER IDENTIFICATION.

FIGURE 55.—*Receiver Control C-948/FGC-1 (automatic frequency control unit), wiring diagram.*

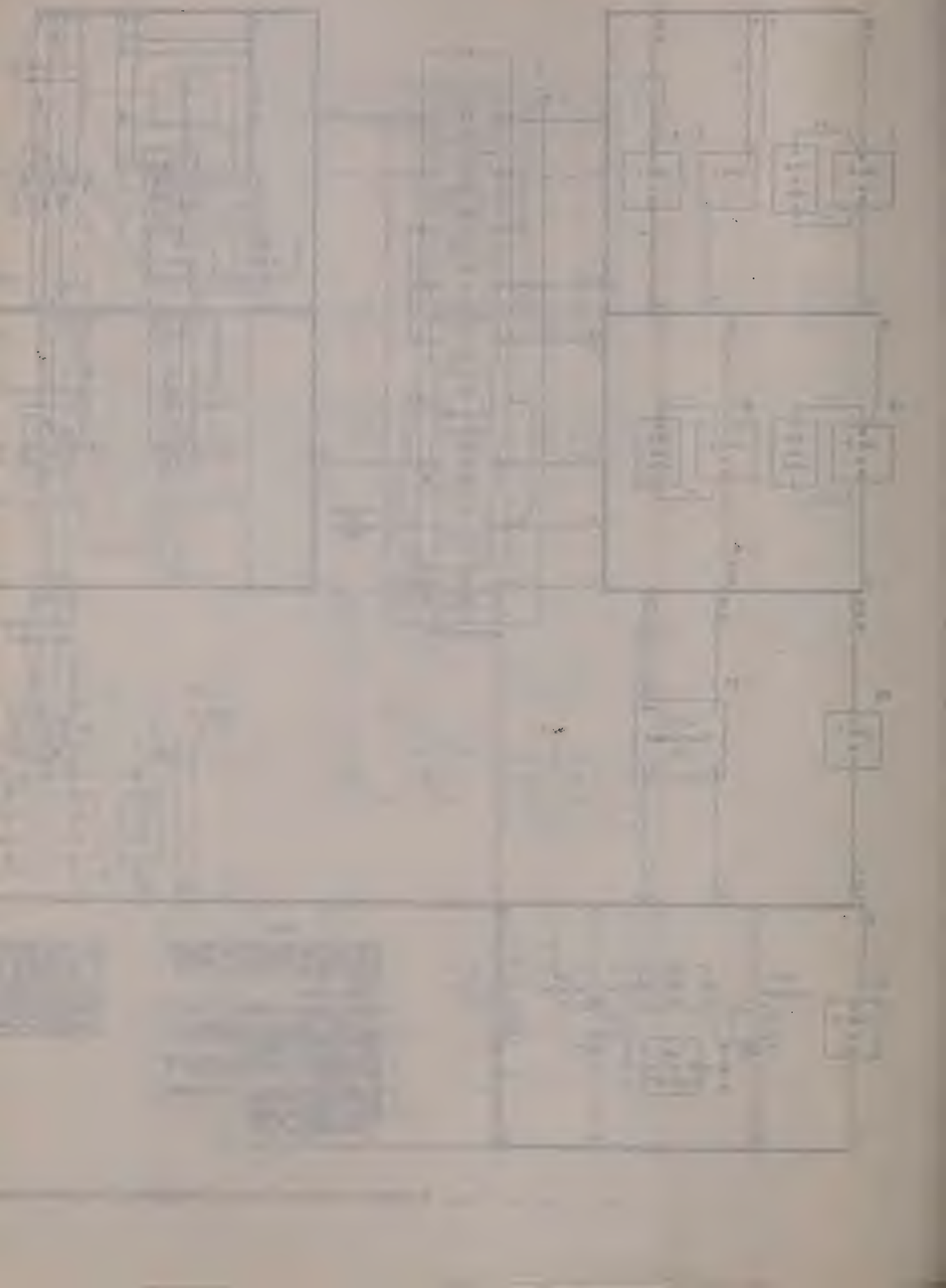

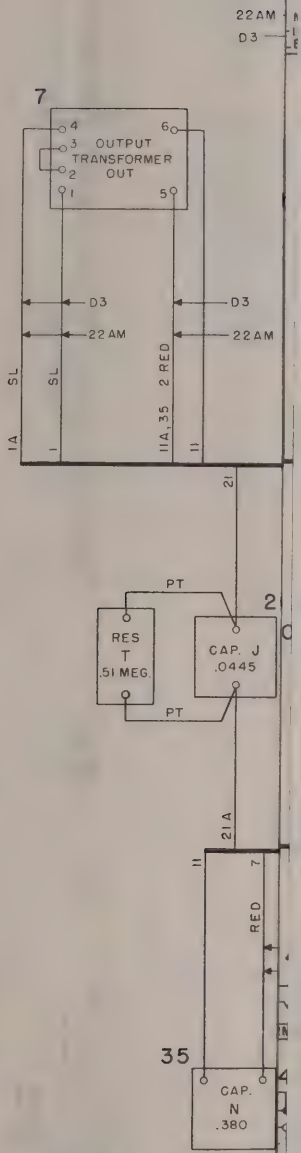
22AM
D3
7
4
3
2
1
6
5
OUTPUT
TRANSFORMER
OUT
D3
D3
22AM
22AM
SL
SL
2 RED
1A
1
11A,35
11
21
PT
2
RES
T
.51 MEG.
CAP. J
.0445
PT
21A
11
7
RED
35
CAP.
N
.380

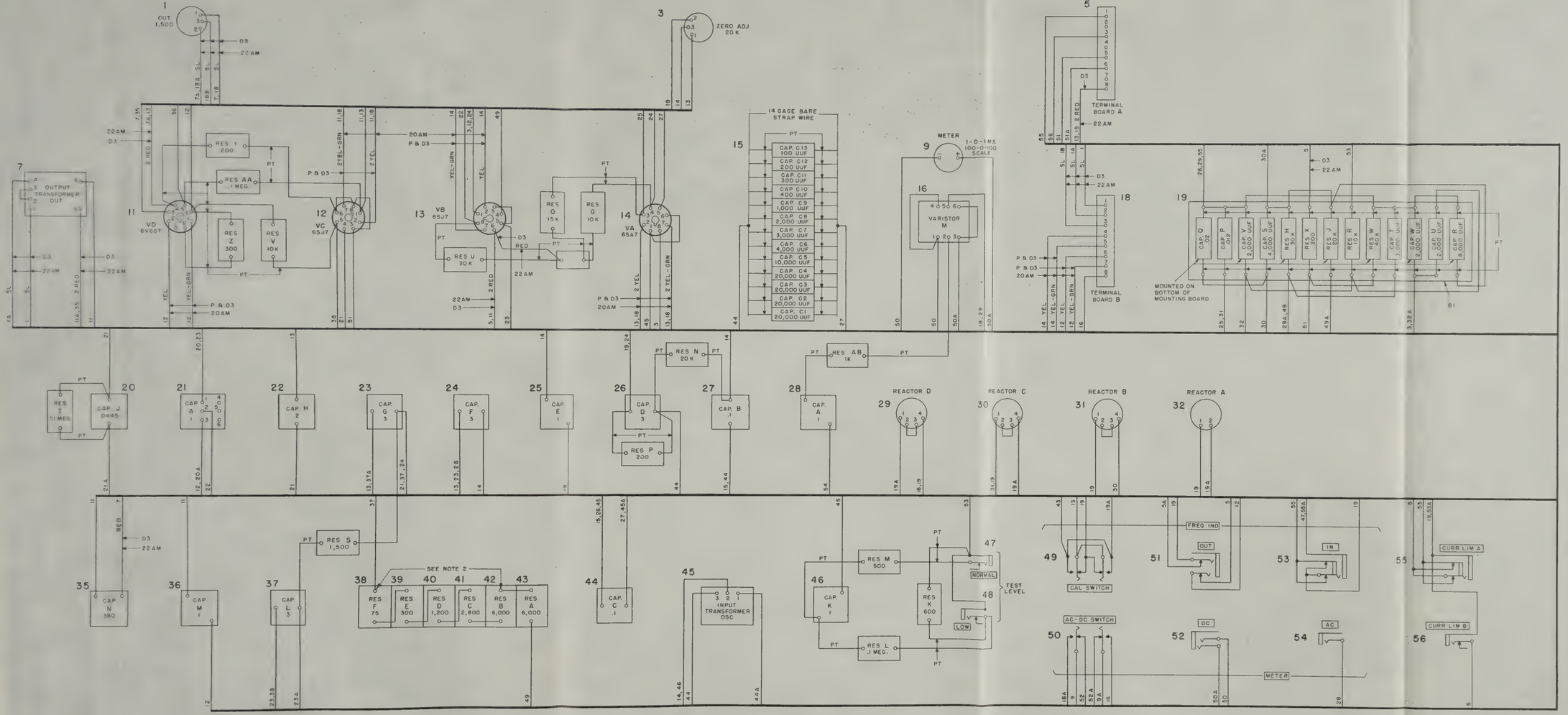

NOTES

1. WIRES NOT OTHERWISE SPECIFIED ARE BLACK, 22AM WIRE, RUN DIRECTLY FROM TERMINAL TO TERMINAL IN THE SHORTEST POSSIBLE MANNER, AND INDEPENDENT OF ALL OTHER LEADS
2. P DENOTES PAIR
3. PT DENOTES LEADS FURNISHED AS PART OF THE APPARATUS
4. D3 WIRING IS 20AM WIRE RUN LOOSE AND DRESSED BACK AGAINST THE PANEL IN THE MOST CONVENIENT MANNER
5. J DENOTES THE TOP OR LEFT SIDE OF SWITCHES WHEN LOOKING AT THE TERMINAL ENDS OF THE SWITCHES
6. B1 DENOTES THE EDGE OF THE MOUNTING BOARD NEAREST THE PANEL
7. RESISTORS B THROUGH F ARE STRAPPED AS REQUIRED TO PROVIDE THE CORRECT CALIBRATION LEVEL.
8. THE SMALL DESIGNATION NUMBER AT THE BEGINNING OF EACH FEED LINE (ADJACENT TO THE COMMON OR AIR LINE) CORRESPONDS TO THE NUMBER OF THE PIECE OF APPARATUS TO WHICH THE FEED LINE RUNS. FOR EXAMPLE, THE FEED LINE NUMBERED 50A STARTING AT APPARATUS NUMBERED 9, CONNECTS TO THE APPARATUS NUMBERED 50, AT WHICH POINT THIS FEED LINE IS NUMBERED 9. COLORING SERVES AS FURTHER IDENTIFICATION.
9. UNLESS OTHERWISE SPECIFIED, RESISTORS ARE IN OHMS CAPACITORS ARE IN UF.

TM 356-61

FIGURE 56.—*Signal Data Converter CV-205/FGC-1 (frequency indicator panel), wiring diagram.*

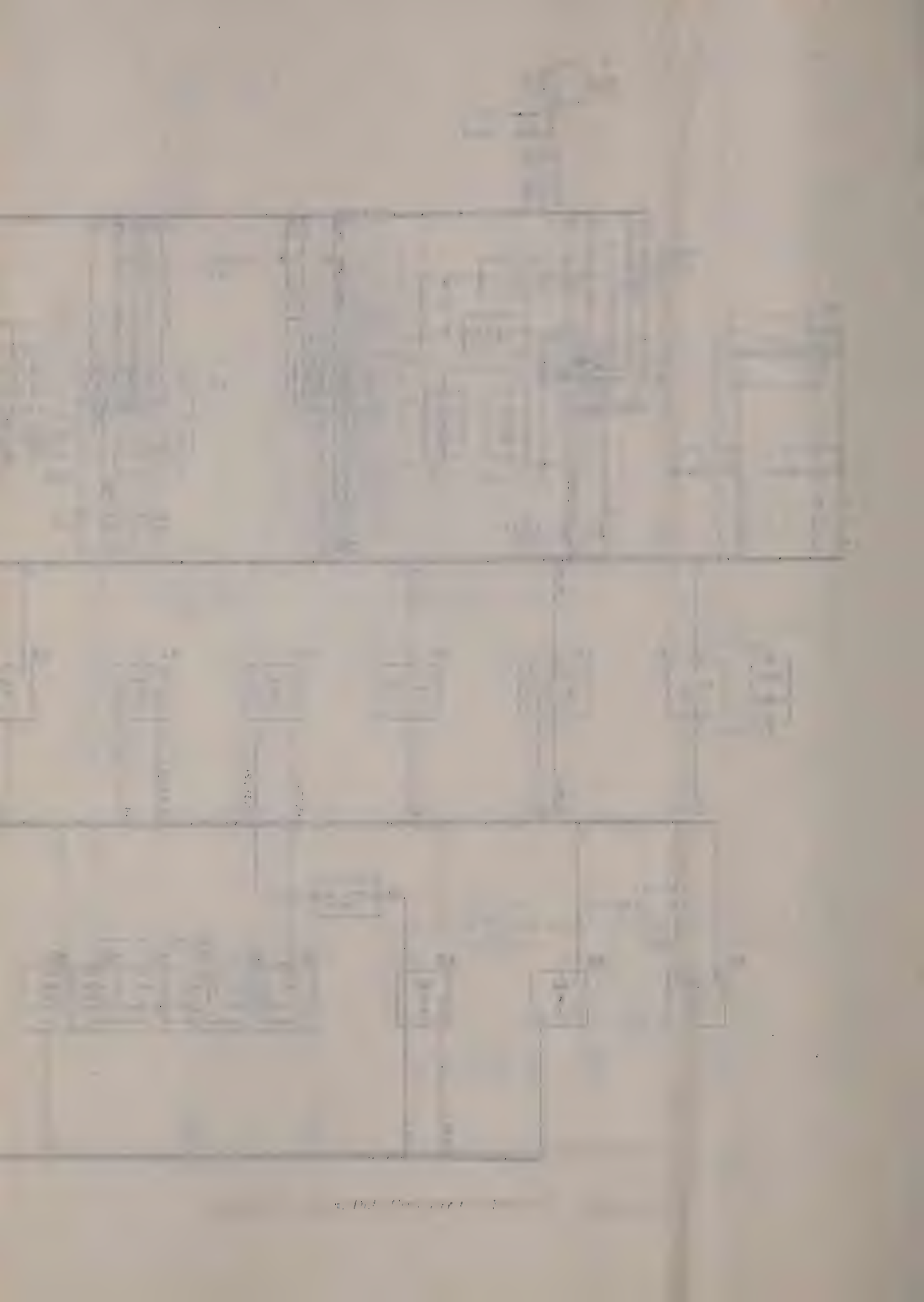

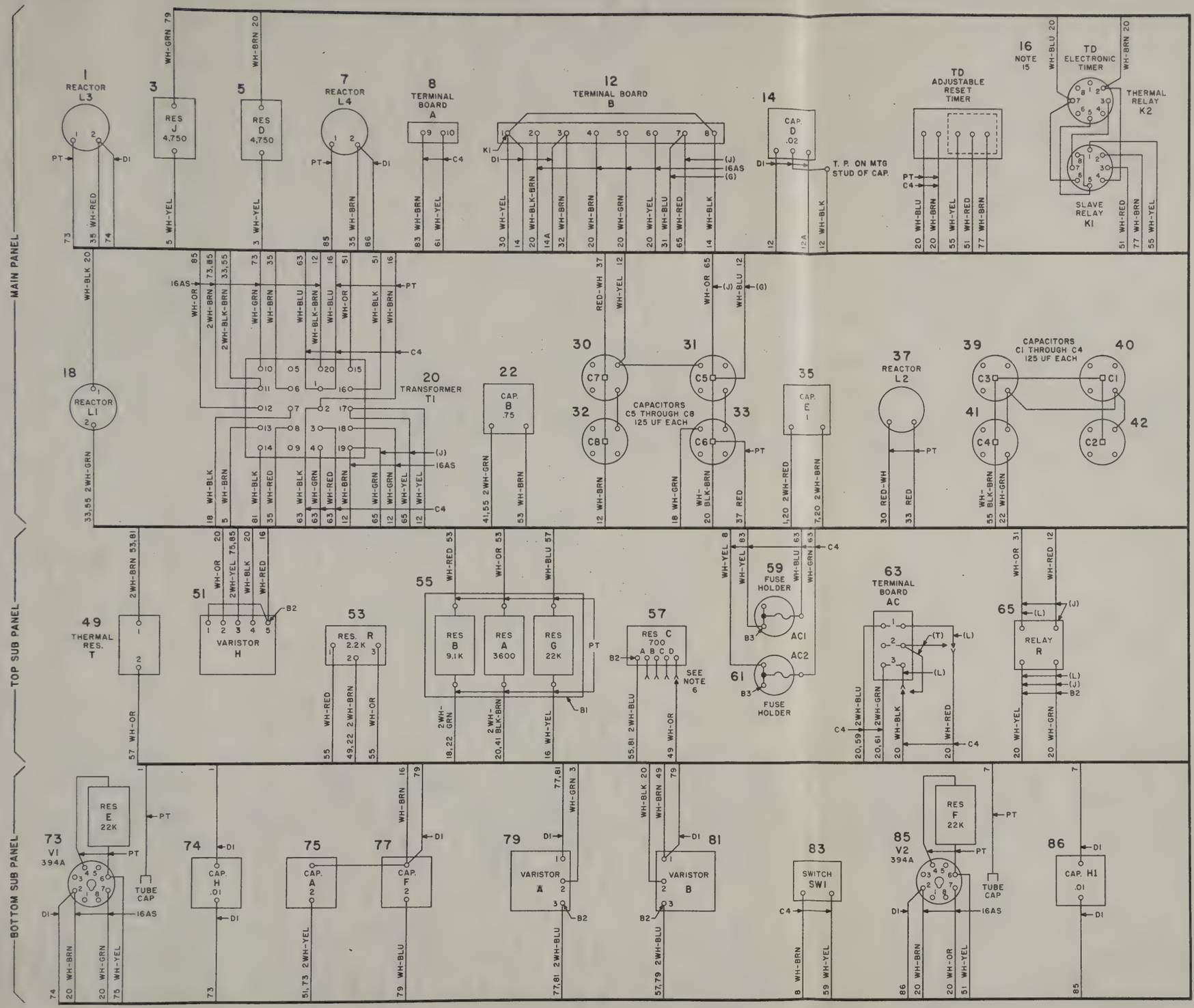

NOTES

1. WIRES NOT OTHERWISE SPECIFIED ARE STRANDED 20AS
2. "C4" WIRING IS STRANDED 16AS UNLESS OTHERWISE SPECIFIED AND SHALL BE KEPT SEPARATE FROM ALL OTHER LEADS.
3. "DI" WIRING IS W STRANDED 20AS WIRE UNLESS OTHERWISE SPECIFIED, AND NOT INCLUDED IN THE LOCAL CABLE BUT RUN DIRECTLY FROM TERMINAL TO TERMINAL IN THE SHORTEST POSSIBLE MANNER INDEPENDENTLY OF ALL OTHER LEADS.
4. "B2" TERMINAL NEAREST PANEL.
5. "B1" EDGE OF RESISTANCE MOUNTING NEAREST PANEL.
6. A TERMINAL ON RESISTOR C IS SELECTED BY THE MANUFACTURER TO GIVE A TOTAL NOMINAL RESISTANCE EQUAL TO THE RESISTANCE STAMPED ON THE THERMAL RESISTOR T.
7. STRAPPING IS MADE WITH W STRANDED 20AS WIRE EXCEPT WHERE BARE STRAPS ARE PERMISSIBLE.
8. "PT" DENOTES LEADS FURNISHED AS PART OF APPARATUS.
9. "K1" LEFT TERMINAL ON TERMINAL STRIP.
10. "B3" TERMINAL AT END OF EXTRACTOR FUSE POST.
11. (G) WIRING OPTION ELIMINATES RELAY R FROM THE CIRCUIT.
12. (J) WIRING OPTION PLACES RELAY R IN THE CIRCUIT.
13. (L) WIRING OPTION FOR USE WITH 120 VOLT AC POWER SOURCE.
14. (T) WIRING OPTION FOR USE WITH 240 VOLT AC POWER SOURCE.
15. TIMER TD MAY BE EITHER AN ADJUSTABLE RESET TIMER OR AN ELECTRONIC TIMER. BOTH TIMERS ARE SHOWN IN THIS DIAGRAM. USE THE APPROPRIATE TIMER DIAGRAM.

TM 356-66

FIGURE 57.—*Power Supply PP-737/FGC-1 (X61680B rectifier), wiring diagram.*

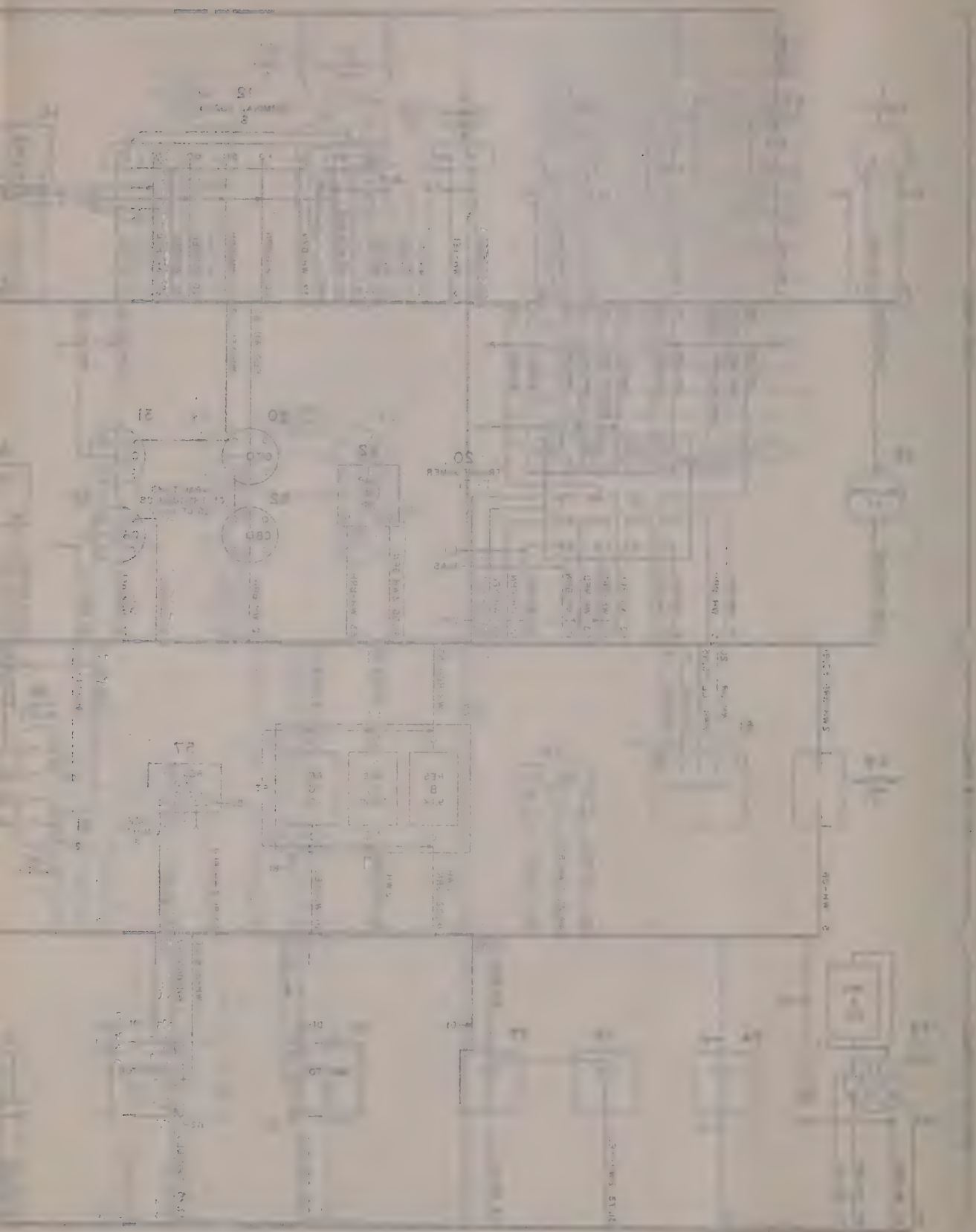

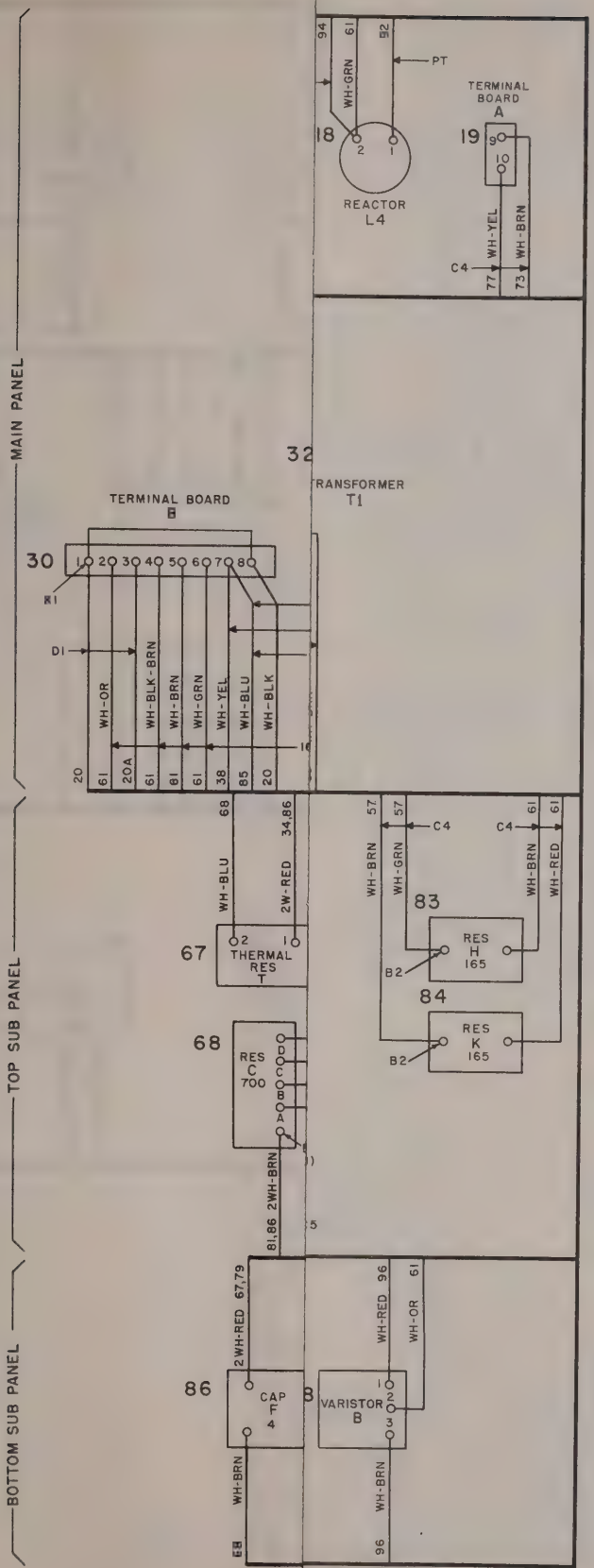

NOTES;

1. WIRES NOT OTHERWISE SPECIFIED ARE 20AS STRANDED.
2. "C4" WIRING IS 16AS STRANDED. WIRE RUN SEPARATELY FROM ALL OTHER LEADS.
3. "D1" WIRING IS WHITE 20AS STRANDED WIRE (UNLESS OTHERWISE SPECIFIED) RUN FROM TERMINAL TO TERMINAL IN THE SHORTEST POSSIBLE MANNER AND INDEPENDENT OF ALL OTHER LEADS.
4. "B1" EDGE OF RES. MTG NEAREST PANEL.
5. "B2" TERMINAL NEAREST PANEL.
6. "B3" TERMINAL AT END OF FUSE EXTRACTOR POST.
7. "B4" END OF PANEL NEAREST MOUNTING SCREWS.
8. "PT" DENOTES LEADS FURNISHED WITH APPARATUS.
9. "K1" LEFT TERMINAL ON TERMINAL STRIP.
10. A TERMINAL ON RESISTOR C IS SELECTED BY THE MANUFACTURER TO GIVE A TOTAL NOMINAL RESISTANCE EQUAL TO THE RESISTANCE STAMPED ON THERMAL RESISTOR T.

TM 356-67

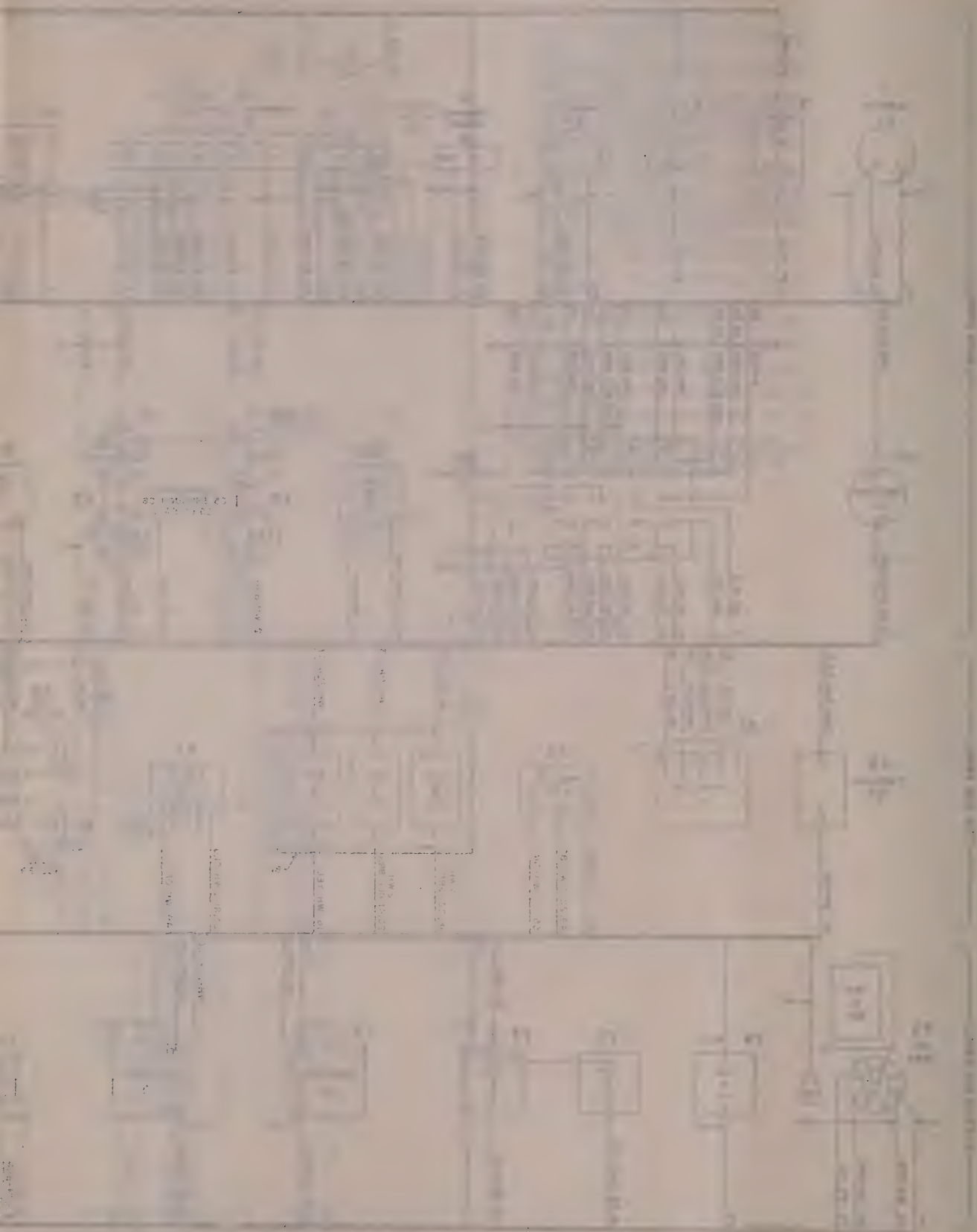

MAIN PANEL

TOP SUB PANEL

BOTTOM SUB PANEL

NOTES;

1. WIRES NOT OTHERWISE SPECIFIED ARE 20AS STRANDED.
2. "C4" WIRING IS 16AS STRANDED WIRE RUN SEPARATELY FROM ALL OTHER LEADS
3. "D1" WIRING IS WHITE 20AS STRANDED WIRE (UNLESS OTHERWISE SPECIFIED) RUN FROM TERMINAL TO TERMINAL IN THE SHORTEST POSSIBLE MANNER AND INDEPENDENT OF ALL OTHER LEADS.
4. "B1" EDGE OF RES. MTG NEAREST PANEL
5. "B2" TERMINAL NEAREST PANEL
6. "B3" TERMINAL AT END OF FUSE EXTRACTOR POST
7. "B4" END OF PANEL NEAREST MOUNTING SCREWS.
8. "PT" DENOTES LEADS FURNISHED WITH APPARATUS
9. "K1" LEFT TERMINAL ON TERMINAL STRIP.
10. A TERMINAL ON RESISTOR C IS SELECTED BY THE MANUFACTURER TO GIVE A TOTAL NOMINAL RESISTANCE EQUAL TO THE RESISTANCE STAMPED ON THERMAL RESISTOR T.

TM 356-67

FIGURE 58.—*Power Supply PP-763/FGC-1 (X61680C rectifier), wiring diagram.*

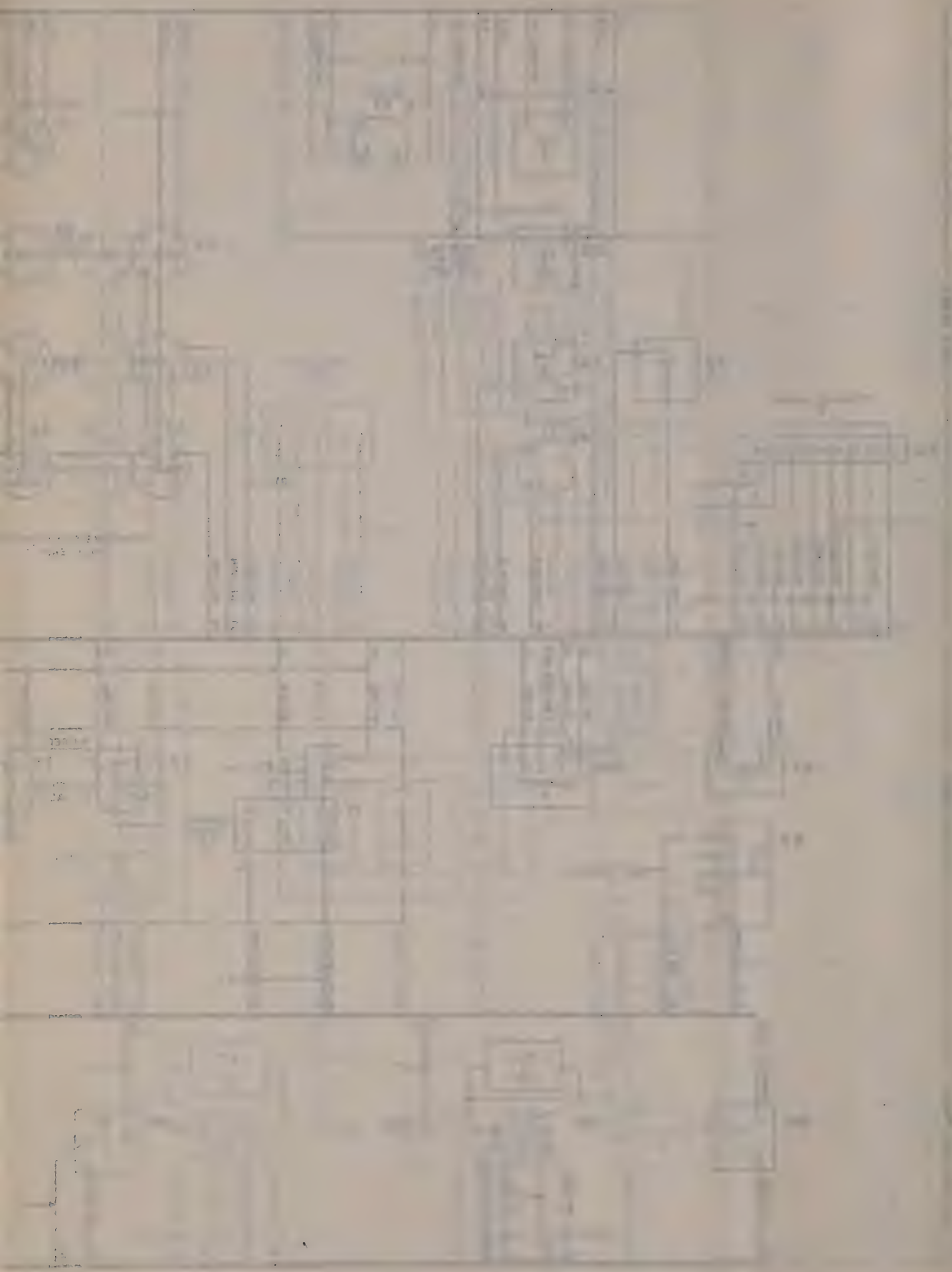

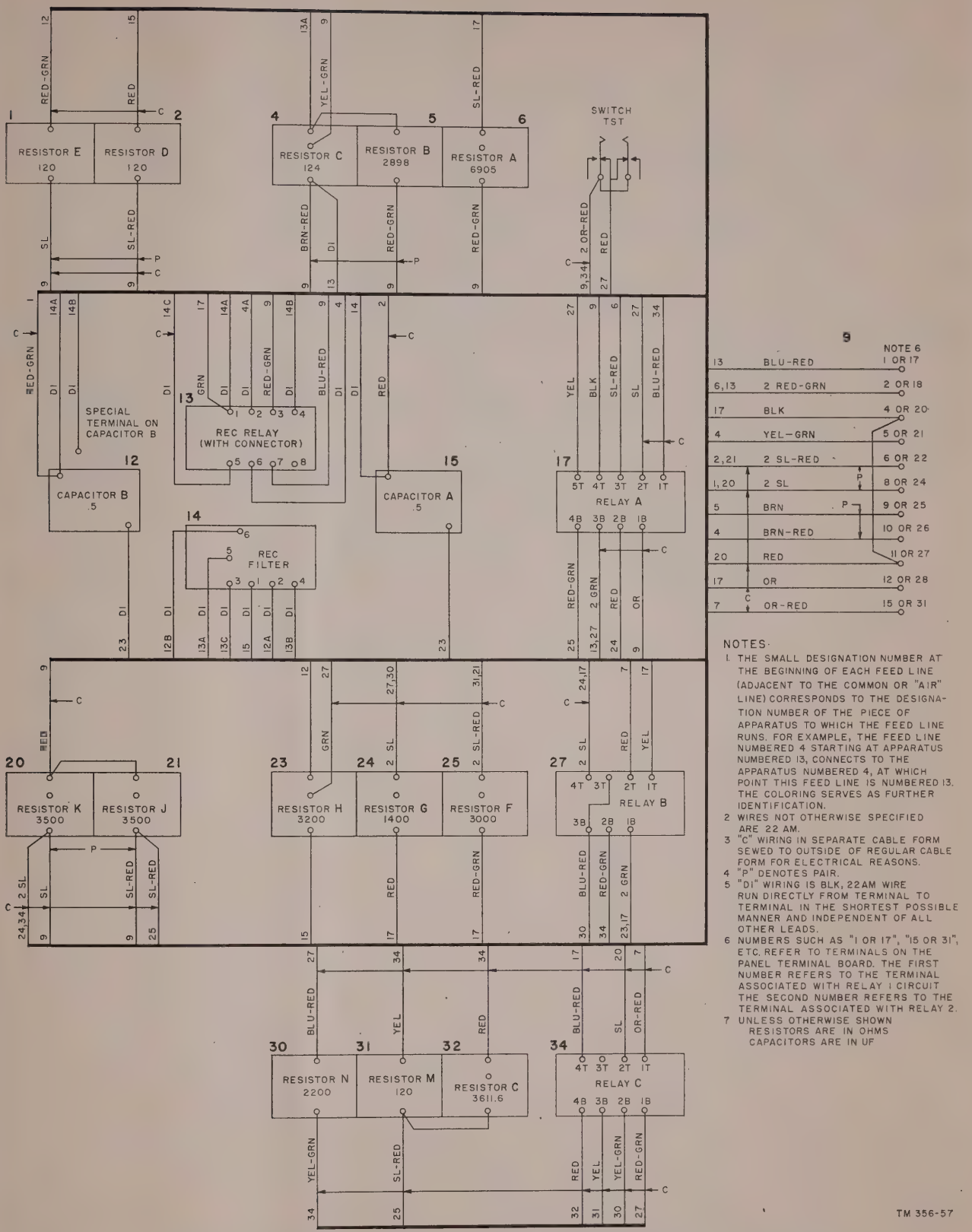

NOTES

1. THE SMALL DESIGNATION NUMBER AT THE BEGINNING OF EACH FEED LINE (ADJACENT TO THE COMMON OR "AIR" LINE) CORRESPONDS TO THE DESIGNATION NUMBER OF THE PIECE OF APPARATUS TO WHICH THE FEED LINE RUNS. FOR EXAMPLE, THE FEED LINE NUMBERED 4 STARTING AT APPARATUS NUMBERED 13, CONNECTS TO THE APPARATUS NUMBERED 4, AT WHICH POINT THIS FEED LINE IS NUMBERED 13. THE COLORING SERVES AS FURTHER IDENTIFICATION.
2. WIRES NOT OTHERWISE SPECIFIED ARE 22 AM.
3. "C" WIRING IN SEPARATE CABLE FORM SEWED TO OUTSIDE OF REGULAR CABLE FORM FOR ELECTRICAL REASONS.
4. "P" DENOTES PAIR.
5. "DI" WIRING IS BLK, 22AM WIRE RUN DIRECTLY FROM TERMINAL TO TERMINAL IN THE SHORTEST POSSIBLE MANNER AND INDEPENDENT OF ALL OTHER LEADS.
6. NUMBERS SUCH AS "1 OR 17", "15 OR 31", ETC. REFER TO TERMINALS ON THE PANEL TERMINAL BOARD. THE FIRST NUMBER REFERS TO THE TERMINAL ASSOCIATED WITH RELAY 1 CIRCUIT THE SECOND NUMBER REFERS TO THE TERMINAL ASSOCIATED WITH RELAY 2.
7. UNLESS OTHERWISE SHOWN RESISTORS ARE IN OHMS CAPACITORS ARE IN UF

TM 356-57

Figure 54. Telegraph Repeater TH–11/FGC–1 (receive relay panel), wiring diagram.

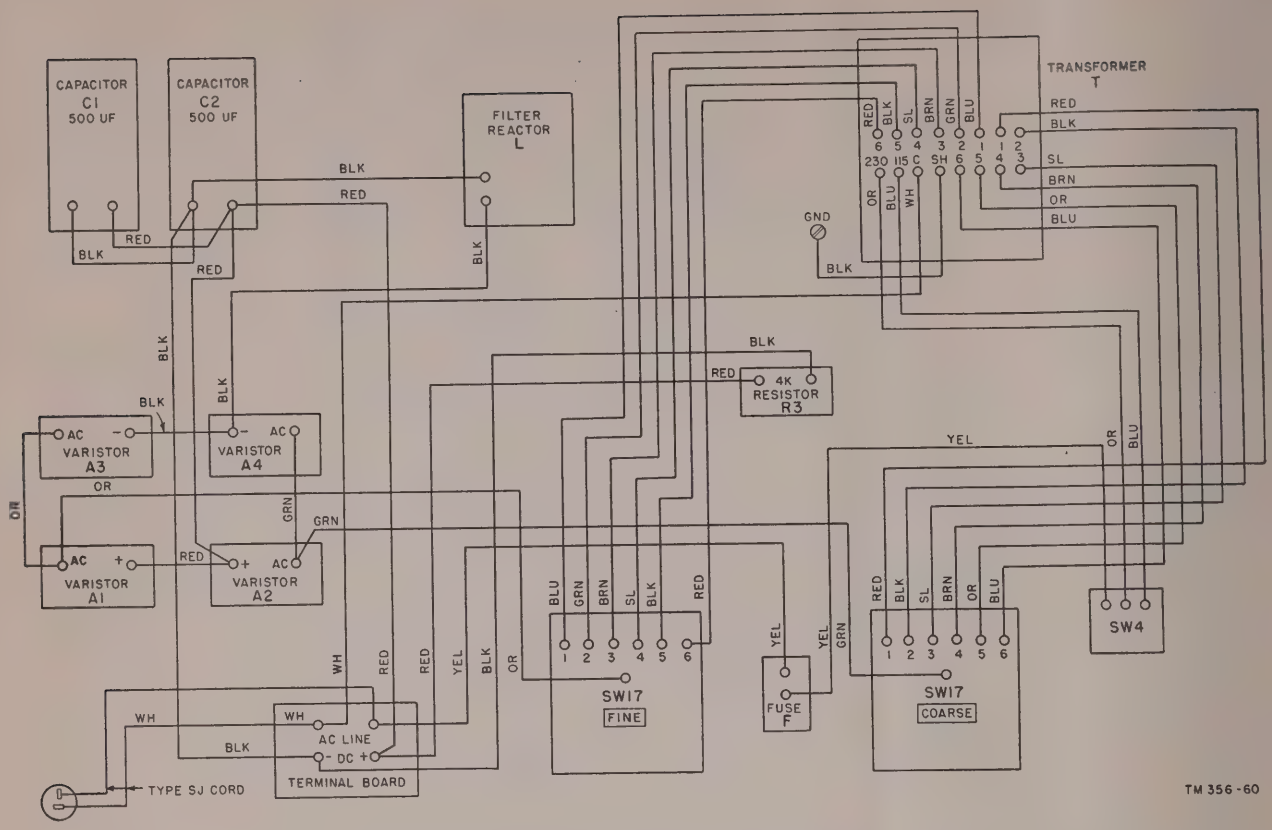

Figure 59. Disk-type rectifier, wiring diagram.

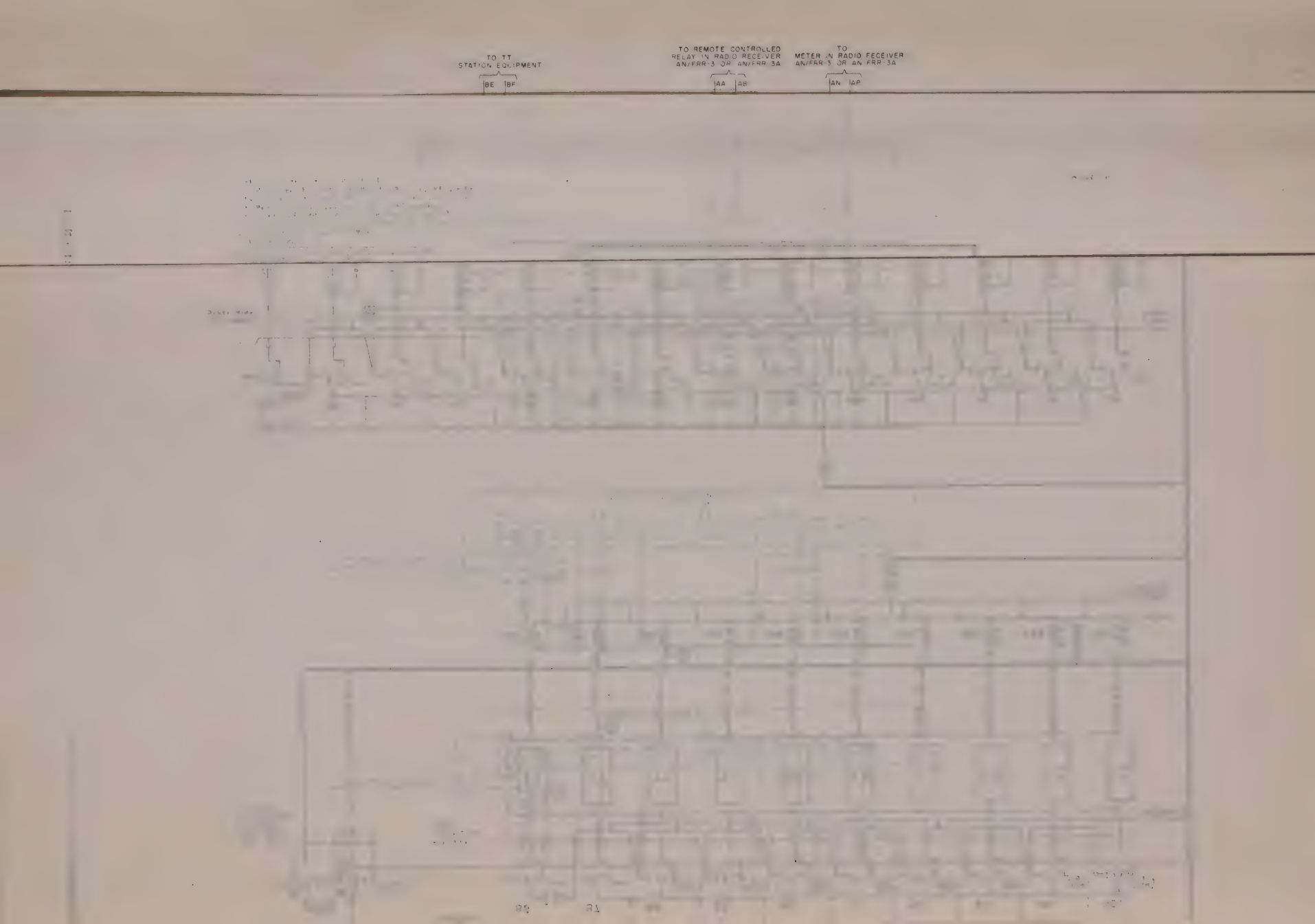
TO TT
STATION EQUIPMENT
BE
BF
TO REMOTE CONTROLLED
RELAY IN RADIO RECEIVER
AN/FRR-3 OR AN/FRR-3A
AA
AB
TO
METER IN RADIO RECEIVER
AN/FRR-3 OR AN/FRR-3A
AN
AP

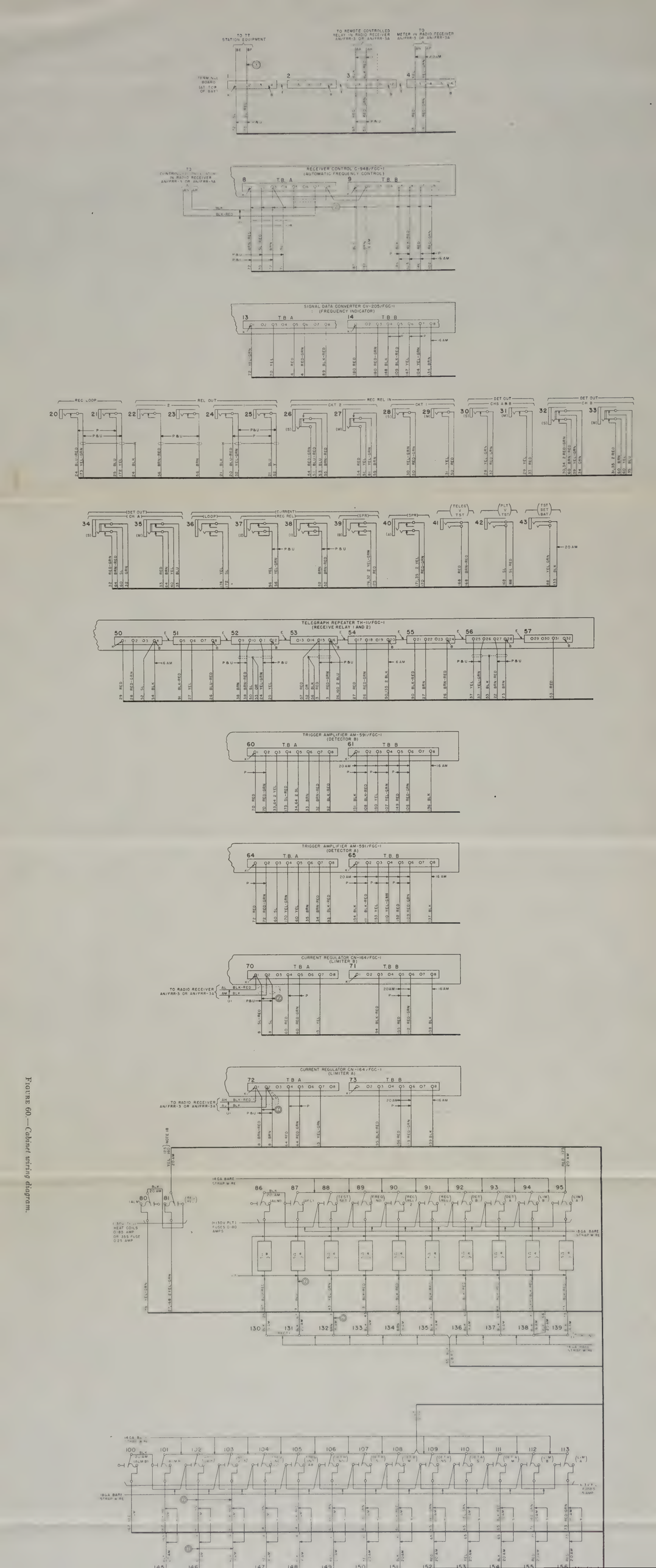

FIGURE 60.—*Cabinet wiring diagram.*

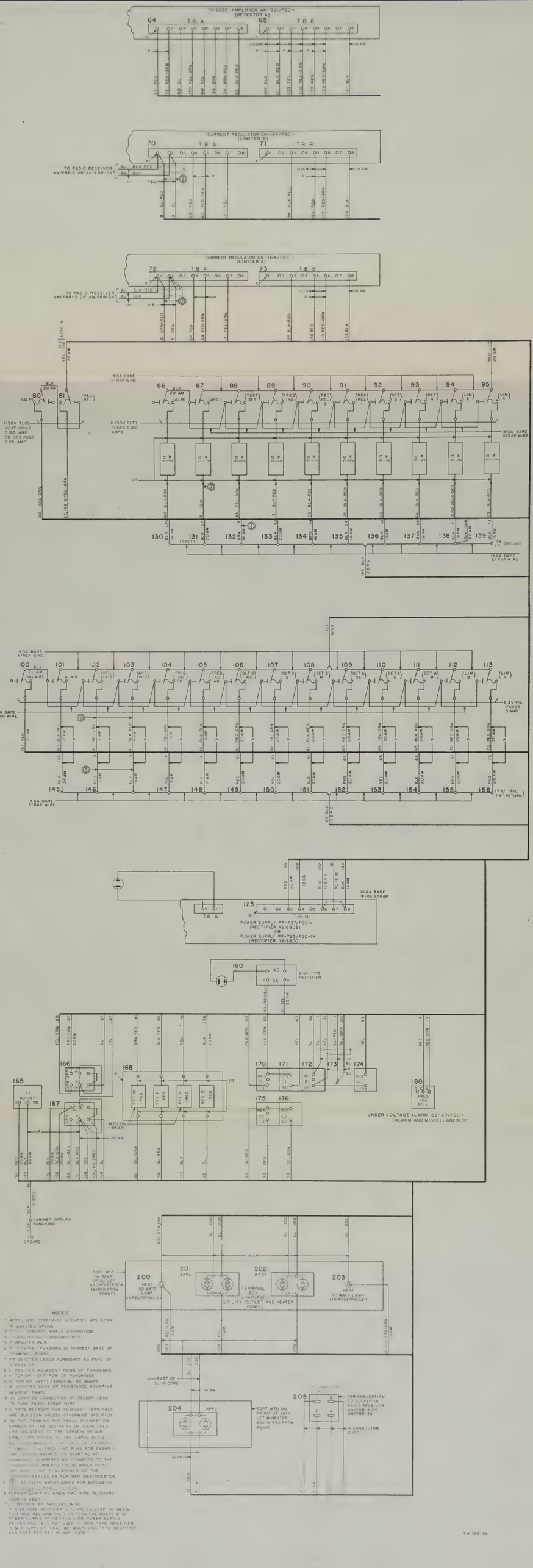

NOTES:

1. WIRE, NOT OTHERWISE SPECIFIED ARE 20 AM 6 WIRELESS GAUGE.
2. ⏚ DENOTES SHIELD CONNECTION
3. ⏚ DENOTES GROUNDED WIRE
4. P DENOTES PAIR.
5. A TERMINAL PUNCHING IS NEAREST BASE OF TERMINAL STRIP.
6. PT DENOTES LEADS FURNISHED AS PART OF ATTENTUATOR.
7. E DENOTES ADJACENT ROWS OF PUNCHINGS.
8. K TOP (OR LEFT) ROW OF PUNCHINGS.
9. K1 TOP (OR LEFT) TERMINAL ON BOARD.
10. B1 DENOTES EDGE OF RESISTANCE MOUNTING NEAREST PANEL.
11. A DENOTES CONNECTION OF FEEDER LEAD TO FUSE PANEL STRAP WIRE.
12. STRAPS BETWEEN NON-ADJACENT TERMINALS ARE BLK 22AM UNLESS OTHERWISE SPECIFIED.
13. ON THIS DRAWING THE SMALL DESIGNATION NUMBER AT THE BEGINNING OF EACH FEED LINE (ADJACENT TO THE COMMON OR SUB-LINE) CORRESPONDS TO THE LARGE DESIG NUMBER [illegible] FOR EXAMPLE THE [illegible] NUMBERED 175 STARTING AT [illegible] NUMBERED 60, CONNECTS TO THE [illegible] WHERE NO. 175 AT WHICH POINT [illegible] IS NUMBERED 60. THE [illegible] SERIES AS FURTHER IDENTIFICATION.
14. (2) INDICATES WIRING ADDED FOR AUTOMATIC [illegible] FEATURE.
15. FURNISH (3) WIRING WHEN TWO WIRE RECEIVING (COP) IS USED.
16. ⏚ DENOTES 6F SHIELDED WIRE.
17. IF DISK TYPE RECTIFIER IS SUPPLIED, LEAD BETWEEN FUSE REC REL AND PIN 7 ON TERMINAL BOARD B OF POWER SUPPLY PP-737/FGC-1 OR POWER SUPPLY PP-763/FGC-1 IS NOT USED. IF DISK TYPE RECTIFIER S.N.T. SUPPLIED, LEAD BETWEEN DISK TYPE RECTIFIER AND FUSE REC REL IS NOT USED.

FIGURE 60.—*Cabinet wiring diagram.*

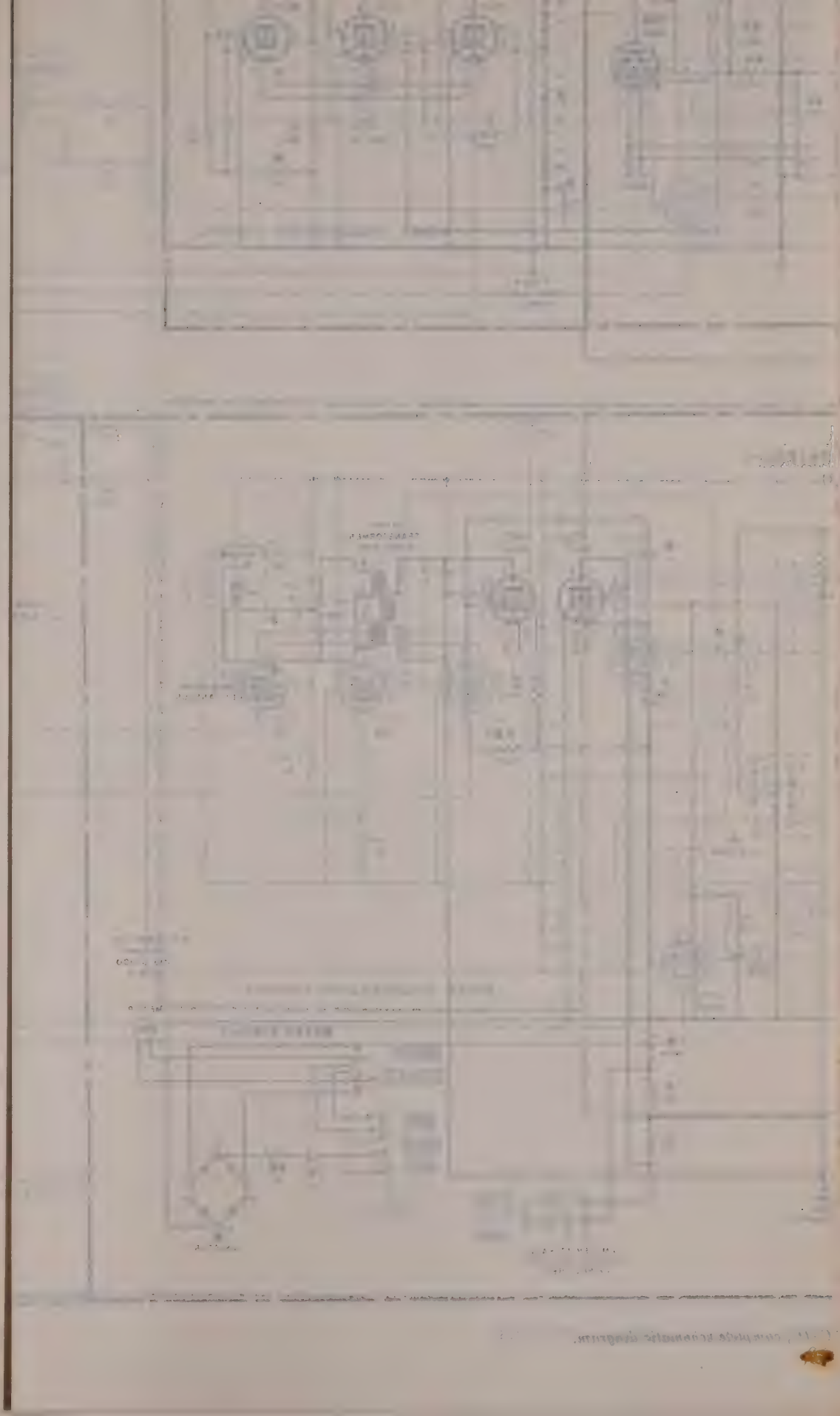

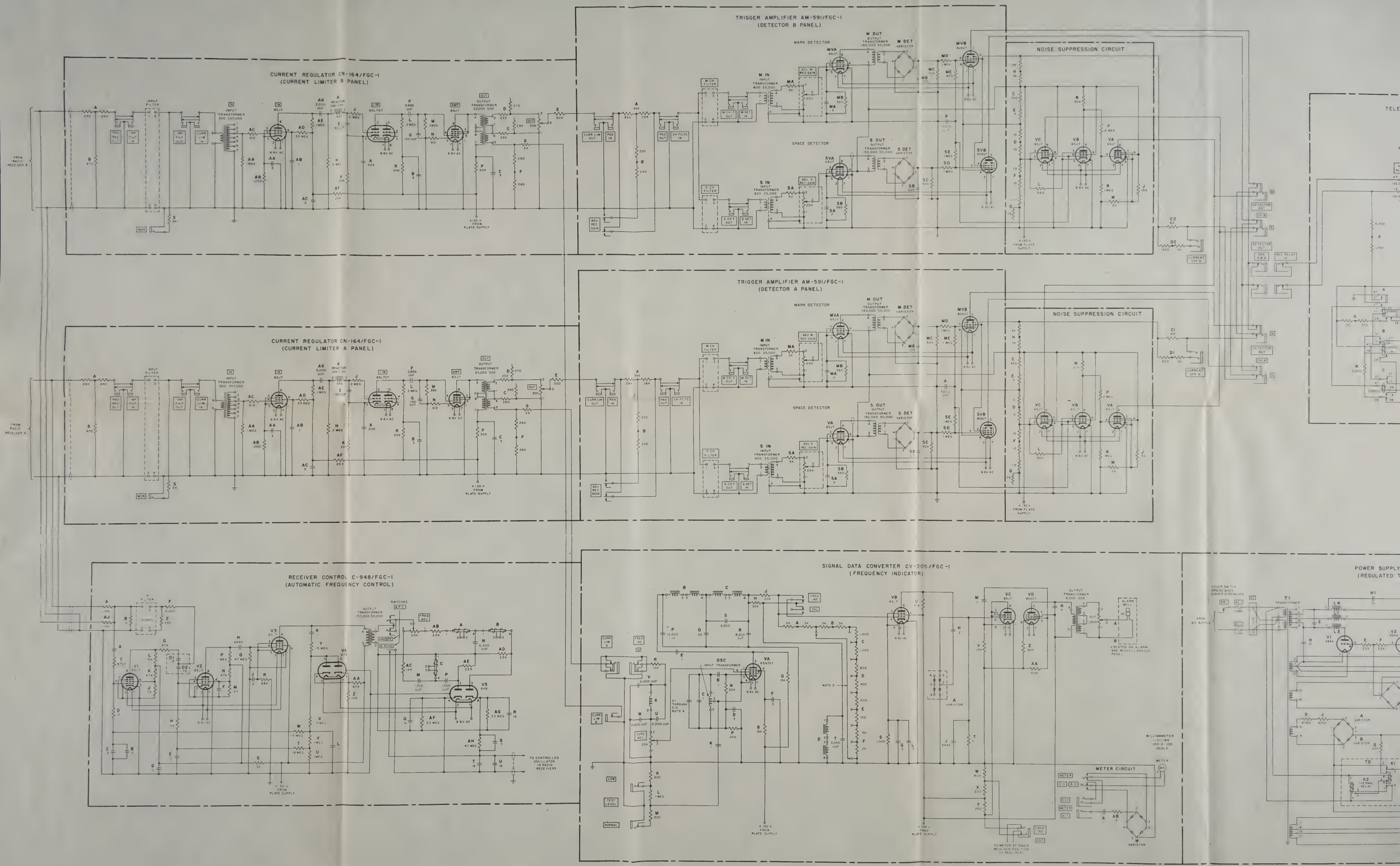

FIGURE 61.—*Radioteletype Terminal AN/FGC-1C, complete schematic diagram.*

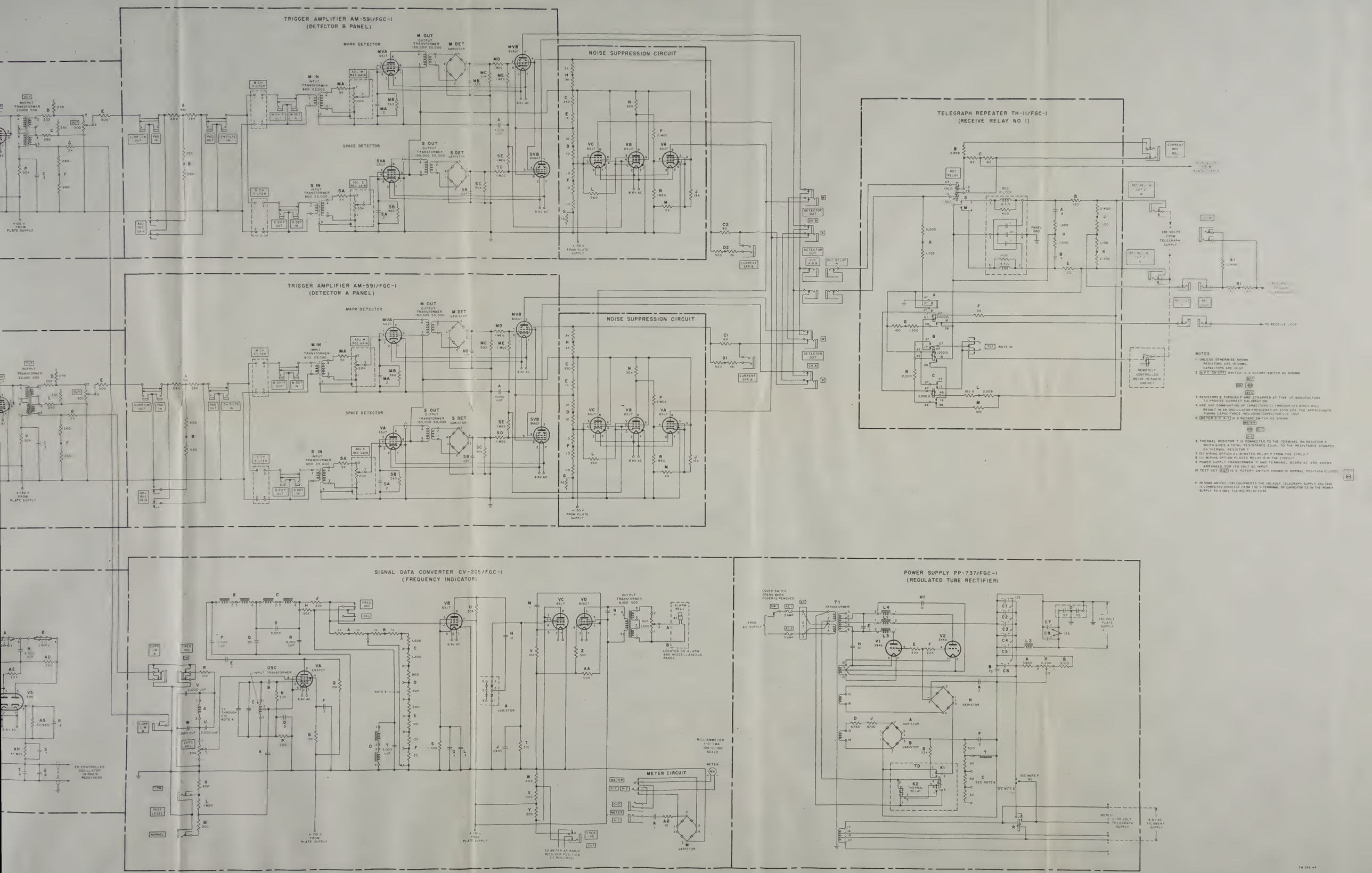

FIGURE 61.—*Radioteletype Terminal AN/FGC-1C, complete schematic diagram.*

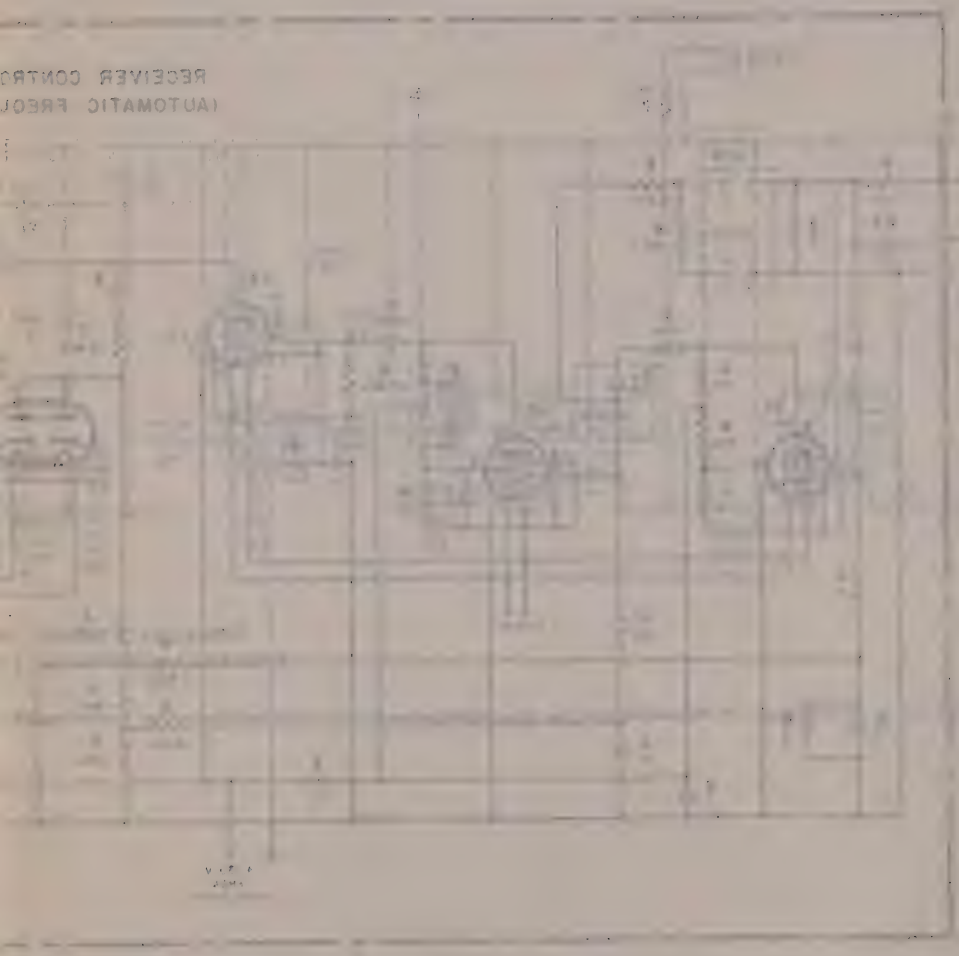

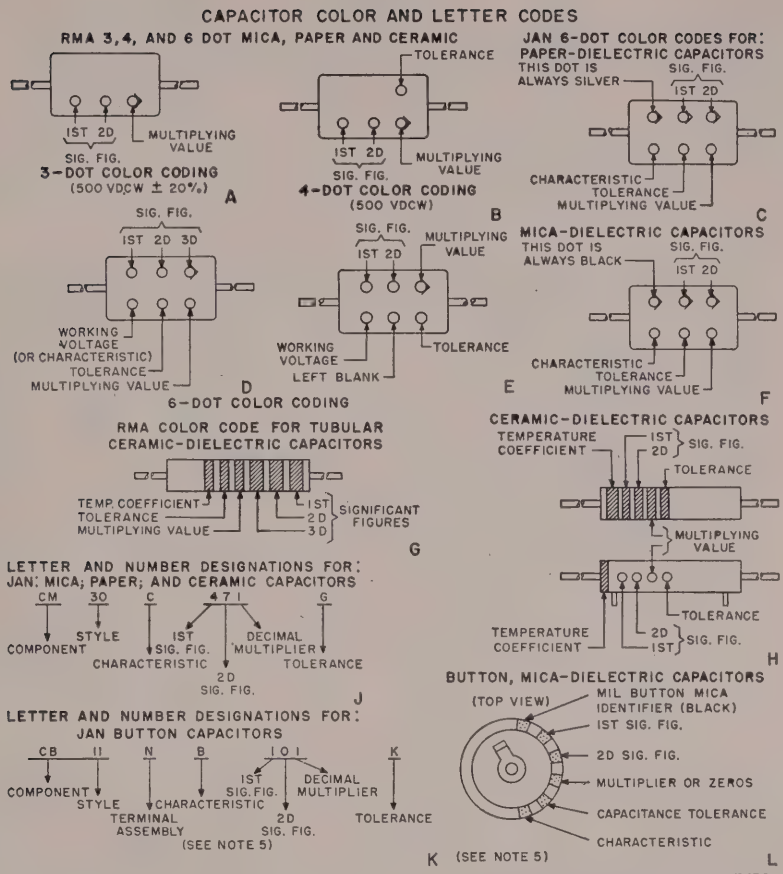

- STANDARDS -					JAN MICA-CM		JAN PAPER-CM		JAN CERAMIC-CC					
									CAP. TOL. FOR MORE THAN 10 UUF			CAP. TOL. FOR 10 UUF OR LESS		
COLOR	SIG. FIG.	DECIMAL MULTIPLIER	% TOL.	VDCW	LETTER TOL.	CHARACTERISTIC	LETTER TOL.	CHARACTERISTIC	DEC. MULT.	%	LETTER DESIGNATION	UUF	LETTER DESIGNATION	CHARACTERISTIC
BLACK	0	1	±20	500	M	A	M	A	1	±20	M	±2.0	G	C
BROWN	1	10	± 1	100	-	B	-	E	10	± 1	F	-	-	H
RED	2	100	± 2	200	G	C	-	H	100	± 2	G	-	-	L
ORANGE	3	1,000	± 3	300	-	D	N*	J	1,000	-	-	-	-	P
YELLOW	4	10,000	± 4	400	-	E	-	P	-	-	-	-	-	R
GREEN	5	100,000	± 5	500	-	F	-	R	-	± 5	J	±0.5	D	S
BLUE	6	1,000,000	± 6	600	-	G	-	S	-	-	-	-	-	T
VIOLET	7	10,000,000	± 7	700	-	-	-	T	-	-	-	-	-	U
GRAY	8	100,000,000	± 8	800	-	-	-	-	0.01	-	-	±0.25	C	B
WHITE	9	1,000,000,000	± 9	900	-	-	-	-	0.1	± 10	K	±1.0	F	SL
GOLD	-	0.1	± 5	1,000	J	-	-	-	-	-	-	-	-	A
SILVER	-	0.01	±10	2,000	K	-	K	-	-	-	-	-	-	-
NO COLOR	-	-	±20	500	-	-	-	-	-	-	-	-	-	-

*. THE TOLERANCE OF THIS CAPACITOR IS ±30%, NOT ±3%

NOTES

JAN: JOINT ARMY-NAVY
RMA: RADIO MANUFACTURERS ASSOCIATION

1. THESE COLOR AND LETTER CODES GIVE CAPACITANCES IN MICROMICROFARADS
2. THIS TABLE IS ADAPTED FOR JAN AND RMA COLOR AND JAN LETTER TYPE DESIGNATIONS
3. CERAMIC AND MICA CAPACITORS, BOTH JAN AND RMA, ARE GENERALLY 500 VDCW
4. BUTTON CAPACITORS ARE GENERALLY 300 VDCW
5. READ BUTTON CAPACITOR TOLERANCE UNDER CERAMICS OF MORE THAN 10 UUF
6. CHARACTERISTICS ARE AVAILABLE IN JAN CAPACITOR SPECIFICATION MANUALS
7. THE COMPONENTS USED ABOVE FOR JAN LETTER TYPE DESIGNATIONS ARE:
   CB MICA BUTTON: *CC* CERAMIC; *CM* MICA MOULDED: *CN* PAPER MOULDED

TM CC

Figure 62. Capacitor color code.

RESISTOR COLOR AND LETTER CODE

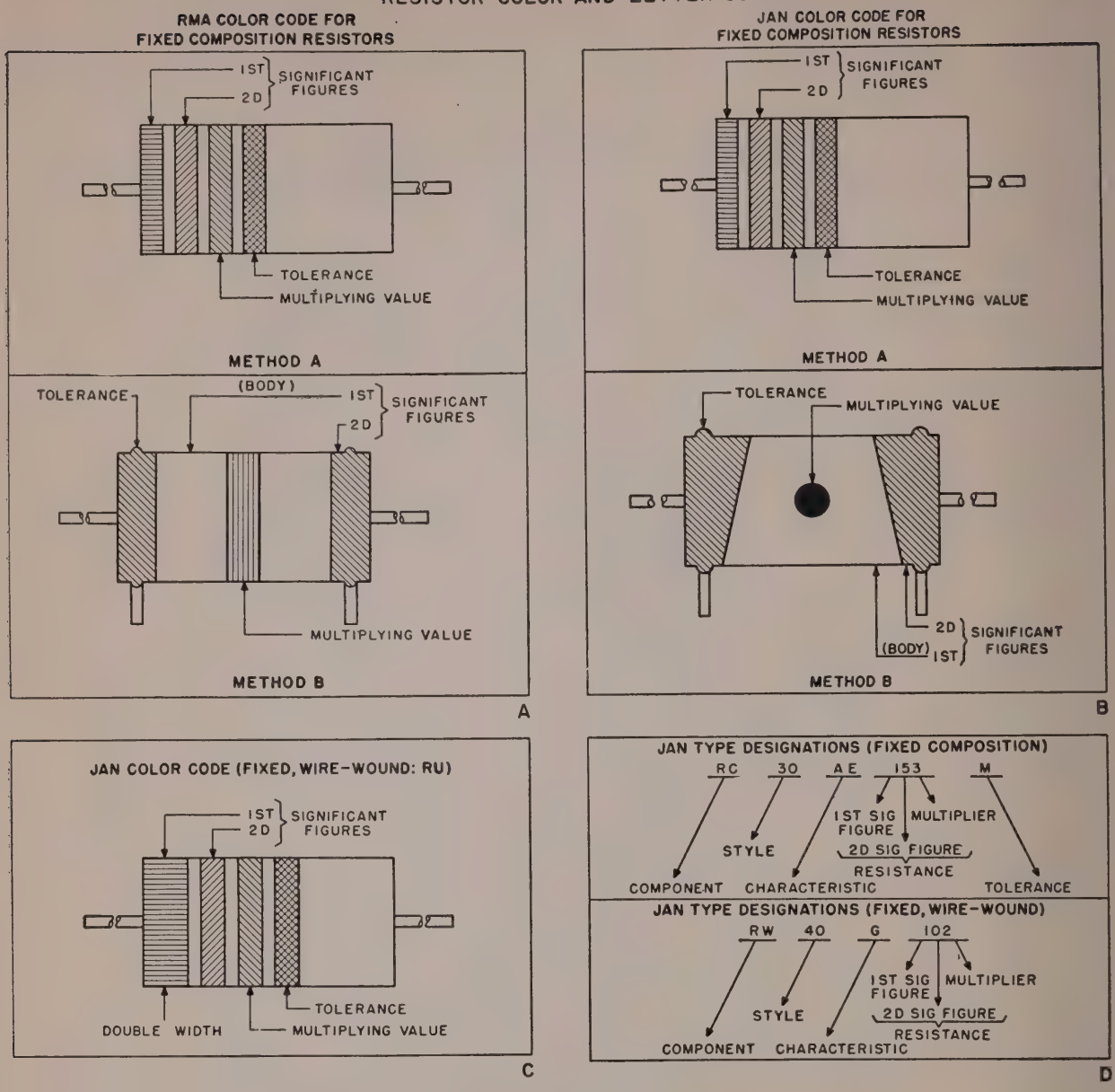

STANDARDS				
COLOR	SIGNIFICANT FIGURE	MULTIPLYING VALUE	TOLERANCE (%)	JAN LETTER TOLERANCE
BLACK	0	1	–	–
BROWN	1	10	± 1	F
RED	2	100	± 2	G
ORANGE	3	1,000	± 3	–
YELLOW	4	10,000	± 4	–
GREEN	5	100,000	± 5	–
BLUE	6	1,000,000	± 6	–
VIOLET	7	10,000,000	± 7	–
GRAY	8	100,000,000	± 8	–
WHITE	9	1,000,000,000	± 9	–
GOLD	–	0.1	± 5	J
SILVER	–	0.01	±10	K
NO COLOR	–	–	±20	M

NOTES:

1. RESISTORS WITH AXIAL LEADS ARE INSULATED. RESISTORS WITH RADIAL LEADS ARE NON-INSULATED.
2. RMA: RADIO MANUFACTURERS ASSOCIATION.
3. JAN: JOINT army - navy.
4. THESE COLOR AND NUMBER CODES GIVE ALL RESISTANCE VALUES IN OHMS.
5. RESISTIVE COMPONENTS USED FOR LETTER TOLERANCES ARE: RC, RN, AND RU.
6. WATTAGE FOR RW TYPES IS FOUND IN THE JAN SPECIFICATIONS UNDER CHARACTERISTICS.

TM RC

Figure 63. Resistor color code.

INDEX

	Paragraphs	Page
A-c power connections	33	22
Adjustable reset timer TD:		
Application	92	64
Theory of operation	93*b*	65
Adjustment:		
Current Regulator CN–164/FGC–1 (current limiter)	43	28
Frequency alarm sensitivity	47	29
Meter	40*d*	27
Operating voltage:		
Disk-type rectifier	42	27
Power supply	41	27
Receiver Control C–948/FGC–1 (automatic frequency control)	46	29
Relays	111	77
Trigger Amplifier AM–591/FGC–1 (detector)	44	28
Adjustments, preoperational	39	26
Alarm:		
And miscellaneous panel. (*See also* Under Voltage Alarm BZ–27/FGC–1).		
Bell, frequency:		
Function	78*f*	42
Theory of operation	86*i*	56
Buzzer, fuse:		
Function	78*f*	42
Theory of operation	87	56
Alarms, audible	78*f*	42
Arctic climate operation	61	32
Audio-frequency measurements, instructions for making	40*f*	27
Automatic frequency control unit. (*See* Receiver Control C–948/FGC–1).		
Bell, frequency alarm:		
Function	78*f*	42
Theory of operation	86*i*	56
Buzzer, fuse alarm:		
Function	78*f*	42
Theory of operation	87	56
Cabinet, description	15	12
Calibration of Signal Data Converter CV–205/FGC–1	45	28
Checking new equipment	25	20
Checklist:		
Equipment performance, use of	74, 75	37, 38
Preventive maintenance forms	67, 68	34, 35
Checks, preoperational	37	24
Cleaning and inspecting chassis	102	68
Components:		
Nomenclature	7*a*	4
Table	7	4
Connections:		
A-c power	33	22
General	27	21
Ground	28	22
Input-signal	29	22
Loop	30	22
Low-frequency radio	35	24
Monitor circuit	32	22
Output signal	30	22
Receiver Control C–948/FGC–1	31	22
To provide neutral loop operation	34	23
To radio receivers	29, 31–33	22
Control circuits, equipment performance	78	41
Controls and instruments	50–55	30–31
Current limiter panel. (*See* Current regulator CN/FGC–1.)		
Current Regulator CN–164/FGC–1 (current limiter):		
Adjustment	43	28
Control and its use	50	30
Description	8	4
Functioning, general	77*b*	41
Theory of operation	81	43
Damage reporting	2*a*	1
Db measurement	40*f*	27
D-c measurements, instructions for making	40*e*	27
Demolition:		
Methods	121	86
To prevent enemy use	121, 122	86
Desert:		
Climate operation	63	32
Maintenance	69*d*	36
Destruction of components to prevent enemy use	122	86
Detector panel. (*See* Trigger Amplifier AM–591/FGC–1.)		
Differences in models	23	17
Dimensions	5	3
Disassembly for shipment or storage	119	85
Disk-type rectifier:		
Description	21	17
Installation	37	24
Operating voltage adjustment	42	27
Preoperational checks	37*b*	25
Removal	38*b*	25
Theory of operation	94	65
Diversity Receiving Equipments AN/FRR–3 and AN/FRR–3A. (*See* Radio Recievers AN/FRR–3 and AN/FRR–3A.)		
Electrical Equipment Cabinet CY–1071/FGC–1, description	15	12

	Paragraphs	Page
Electronic timer TD:		
Application	92	64
Theory of operation	93*a*	64
Equipment performance:		
Checklist	75	38
Use of	74	37
Control circuits	78	41
Fading of signals	76	41
Field maintenance level:		
Instructions	97–118	67–84
Test equipment required for trouble shooting	106	70
Tools, materials, and test equipment	97	67
Trouble shooting	104–113	68–78
Filter, input, characteristics	80	42
Filters, mark and space channels	77*c*	41
Filters, tests	114	79
Final test:		
Automatic frequency control unit	117	83
Detector and noise suppression circuit	116	81
Normal test level	118	84
Final testing and equipment required	115–118	81–84
Forms and records	2	1
Frequency alarm bell	78*f*	42
Frequency alarm sensitivity adjustment	47	29
Frequency indicator panel. (*See* Signal Data Converter CV–205/FGC–1.)		
Frogging	73*c*	37
Functions of components	76*e*	41
Fuse alarm buzzer	78*f*	42
Fuse circuits, theory	87	56
Fuse panel:		
Description	17	14
Theory of operation	87	56
Fuses, location	78*e*	42
Ground:		
Connections	28	22
Return loop	83*a*(3)	45
High-frequency and low-frequency radio systems	4	1
Improper shipment, reporting	2*a*	1
Input filter characteristics	80	42
Input signal:		
Connections	29	22
Frequencies	5	3
Inspecting:		
Chassis	102*b*	68
Lamps	101	68
Inspecting, cleaning, and testing:		
Fuses	100	68
Tubes	99	68
Inspection, visual	72	36
Installation of:		
Disk-type rectifier	38	25
Radioteletype Terminal Equipment AN/FGC–1(*)	26	21
Instruments and controls	50–55	30–31
Jack panel:		
Description	16	14
General functions	78*d*	42
Jack panel—Continued		
Theory	88	58
KS–5844 rectifier. (*See* disk-type rectifier.)		
Loop:		
Arrangements	4*c*	3
Connections	30	22
Ground return	83*a*(3)	45
Metallic	83*a*(3)	45
Operation:		
Neutral	4*c*, 58	3, 31
Connections to provide	34	23
Polar	4*c*, 58	3, 31
Resistance	5	3
Low-frequency radio:		
Connections	35	24
System application	4*a*	1
Maintenance:		
Checklists	2, 67, 68	1
Desert	69	36
Instructions, field	97–108	67–70
Preventive, definition	64	34
Techniques, preventive	66	34
Tropical	69*b*	36
Winter	69*c*	36
Manufacturer's designations	7*a*	4
Mark:		
Channel filter:		
Characteristics	82*b*	44
Function	77*c*	41
Test	114	79
Detector, theory of operation	82*a*	44
Measurements:		
Audio frequency, instructions for making	40*f*	27
Db	40*f*	27
D-c, instructions for making	40*e*	27
Power level, instructions for making	40*f*	27
Signal bias	49	29
Signal frequency, instructions for making	40*g*	27
Metallic loop	83*a*	45
Metallic rectifier KS–5844. (*See* disk-type rectifier.)		
Meter:		
Adjustment	40*d*	27
Circuit, use	40	26
Full-scale deflection table	40*e*	27
Miscellaneous and alarm panel. (*See* Under Voltage Alarm BZ–27/FGC–1).		
Models, differences	23	17
Monitor circuit:		
Connections	32	22
Description	10*b*	9
Theory	83*c*	47
Neutral loop operation	4*c*, 58	3, 31
Connections to provide	34	23
Noise suppression circuit:		
Description	9*a*	9
Final test	116*b*	83
Functioning, general	78*a*	41
Theory of operation	84	50

	Paragraphs	Page
Nomenclature:		
Of components	7*a*, 23*b*	4, 18
Of Radioteletype Terminal AN/FGC–1(*), explanation	3	1
Normal test level, final test	118	84
Operational test	108	70
Operation:		
Arctic climate	61	32
Desert climate	63	32
Tropical climate	62	32
Types	58	31
Outlet and heater panel. (*See* Terminal Box J–447/FGC–1.)		
Output signal	5	3
Connections	30	22
Organizational maintenance:		
Instructions	64–75	34–38
Preventive maintenance services	64–68	34–35
Trouble shooting, general	71	36
Packaging data	6	4
Pad, 9-db	82*a*	44
Painting and rustproofing	70	36
Patch cords and meter circuit, use	40	26
Pluck-out parts:		
Removal	98	67
Replacement	103	68
Polar relay. (*See* receive relay.)		
Polar loop operation	4*c*, 58	3, 31
Power level measurements, instructions for making	40*f*	27
Power supply, operating voltage adjustment	41	27
Power Supply PP–737/FGC–1:		
Adjustable reset timer TD, theory of operation	93*b*	65
Control and its use	55	31
Description	19	14
Electronic timer TD, theory of operation	93*a*	64
Full-wave rectifier circuit, theory	90	59
Preoperational checks	37*a*	24
Regulation of output voltage	91	61
Timer TD, application	92	64
Theory of operation	89–93	58–65
Power Supply PP–763/FGC–1:		
Adjustable reset timer TD, theory of operation	93*b*	65
Control and its use	55	31
Description	20	14
Full-wave rectifier circuit, theory	90	59
Preoperational checks	37*a*	24
Regulation of output voltage	91	61
Theory of operation	89–93	58–65
Timer TD:		
Application	92	64
Detailed operation	92	64
Power supplies:		
Differences in models	23	17
General	79	42
Power unit KS–5844. (*See* disk-type rectifier.)		
Preoperational:		
Checks	37	24
Tests and adjustments	39	26
Preventive maintenance:		
Checklist	67	34
Definition	64	34
Forms	68	35
Techniques, general	66	34
Processing of signal	77	41
Purpose and use	3	1
Radio receiver, connections	29, 31–33	22
Radio receivers:		
AN/FRR–3 or AN/FRR–3A, frequency range	4*b* (1)	1
Other than AN/FRR–3 or AN/FRR–3A	4*b* (4)	3
Frequency range	4*b* (3)	2
Power cord installation	33*b*	23
Terminal designations	27*a*	21
Used with AN/FGC–1 (*)	4*b*	2
Receiver Control C–948/FGC–1 (automatic frequency control unit):		
Adjustment	46	29
Connections	31	22
Controls and their use	54	31
Description	11	9
Final test	117	83
Functioning, general	78*b*	41
Theory	85	51
Receive relay. (*See also* Telegraph Repeater TH–11/FGC–1.)		
Circuits 1 and 2	83*b*	47
Functioning, general	77*d*	41
Terminal board, repairs requiring solder connections	113	78
Test	48	29
Theory of operation	83	45
Reconditioned equipment, service upon receipt	36	24
Rectifier:		
Disk-type. (*See* Disk-type rectifier.)		
X–61680B. (*See* Power Supply PP–737/FGC–1.)		
X–61680C. (*See* Power Supply PP–763/FGC–1.)		
Relay adjustments	111	77
Removal:		
Disk-type rectifier	38*b*	26
Pluck-out parts	98	67
Repacking for shipment or limited storage	120	85
Repairs requiring solder connections at receive relay terminal board	113	78
Replacement of pluck-out parts	103	68
Reporting unsatisfactory conditions	2	1
Resistance measurements:		
At tube sockets	110*b*	77
Of transformer windings	110*a*	74
Running spares	22	17
Rustproofing and painting	70	36
Scope	1	1
Sectionalizing troubles	73	37

	Paragraphs	Page
Selenium-disk rectifier. (*See* disk-type rectifier.)		
Sensitivity adjustment:		
Frequency alarm	47	29
Trigger Amplifier AM–591/U	44	28
Service upon receipt of used or reconditioned equipment	36	24
Shipment and limited storage	119, 120	85
Shipping weight and dimensions	6*b*	4
Signal bias measurement	49	29
Signal Data Converter CV–205/FGC–1 (frequency indicator):		
Calibration	45	28
Controls and their use	53	31
Description	12	12
Functioning, general	78*c*	41
Oscillator frequency test	114	79
Theory of operation	86	55
Signal processing	77	41
Siting	24	20
Space:		
Channel filter:		
Characteristics	82*b*	44
Function	77*c*	41
Test	82*f*	45
Detector, theory of operation	82*f*	45
Spare fuse panel, description	18	14
Spares, running	22	17
Stand-by condition	10*b*	9
Starting prodcedure	57	31
Starting and stopping procedure, preliminary	56	31
Stopping procedure	59	32
Stopping and starting procedures, preliminary	56	31
Storage and shipment	119–120	85
Suppression circuit, noise. (*See* noise suppression circuit.)		
System applications	4	1
Table of components	7	4
Technical characteristics	5	3
Techniques, preventive maintenance	66	34
Telegraph Repeater TH–11/FGC–1 (receiver relay panel):		
Circuits 1 and 2	83*b*	47
Controls and their use	52	31
Description	10	9
Functioning, general	77*d*	41
Receive relay test	48	29
Theory of operation	83	45
Terminal Box J–447/FGC–1 (outlet and heater panel):		
Description	14	12
Power cord substitution	33*b*	22
Preoperational checks	37*c*	25
Theory 9f operation	95	66
Terminal designations, explanation	27*a*	21
Test board, use and construction	112	78
Test equipment:		
For final testing	115	81
Required for trouble shooting at field maintenance level	106	70
Test equipment—Continued		
Tools and materials for field maintenance	97	67
Tests:		
Final	115–118	81–84
Preoperational	39	26
Testing:		
Filters	114	79
Oscillator frequency	114	79
Receiver relay	48	29
Tubes	99	68
Theory of operation, Radioteletype Terminal Equipment AN/FGC–1(*).	76–96	41–66
Timer TD:		
Application	92	64
Detailed operation	93	64
Tools:		
And materials supplied with AN/FGC–1(*)	65	34
Materials, and test equipment field maintenance	97	67
Transformer windings, resistance	110*b*	77
Trigger Amplifier AM–591/FGC–1 (detector):		
Controls and their use	51	30
Description	9	9
Final tests	116	81
Functioning, general	77*c*	41
Maximum output test	116*a*	81
Sensitivity adjustment	44	28
Theory of operation	82	44
Tropical:		
Climate, operation	62	32
Maintenance	69*b*	36
Trouble shooting:		
Chart	109	70
Data	105	69
Field maintenance level	104–113	68–78
Test equipment required	106	70
General precautions	107	70
Organizational maintenance level, general	71	36
Using equipment performance checklist	74	37
Troubles, sectionalization	73	37
Types of operation	58	31
Under Voltage Alarm BZ–27/FGC–1 (alarm and miscellaneous panel):		
Description	13	12
Theory of operation	96	66
Uncrating	25	20
Unpacking	25	20
Use and purpose	3	1
Used equipment, service upon receipt	26	21
Utility outlet and heater panel. (*See* Terminal Box J–447/FGC–1.)		
Visual inspection	72	36
Voltage and resistance measurements at tube sockets	110*a*	74
Weatherproofing	69	36
Desert maintenance	69*d*	36
General	69*a*	36
Tropical maintenance	69*b*	36
Winter maintenance	69*c*	36

U. S. GOVERNMENT PRINTING OFFICE: 1952